MINGZHU VALVE 明珠阀门

上海明珠阀门制造有限公司
SHANGHAI MINGZHU VALVE MFG.CO.,LTD.

阀门样本 >>>
VALVE STYLEBOOK

※ 电站阀系列
POWER STATION VALVE SERIES

三千控制阀网
www.cv3000.com

主要特点及用途 Main characteristic and application

1、阀门与管路连接采用焊接式结构。

2、密封面不易磨损、擦伤、密封性能好、寿命长。

3、结构紧凑、启闭性好、高度小、维修方便。

4、适用于水、蒸汽、油品管路上，具有耐高温、耐高压的特点。

1. A welding structure is used to connect the valve and pipelines.

2.The sealing face is of a good sealing property and long duration ,uneasy to be worn and rubbed.

3.Compact structure ,well to be opened and closed ,lower in height,easy maintenance.

4.Suitable for applying in pipeline of water, steam and oil goods, has characteristic of high-temperature and high-pressure resisting.

主要性能和使用范围
Chief property and scope of use

产品类型 Product type	公称压力 PN (MPa) Nominal pressure	试验压力(MPa)Test pressure		工作压力(MPa)Working Pressuae			工作温度(℃) Working temperature	适用介质 Applicable medium
		壳体强度 Shell strength test	密封 Sealing	P_{54}	P_{55}	P_{57}		
J$^{H}_{Y}$61-100	10	15	11				≤450	水、蒸汽、油品 Water,Steam,Oil goods
J$^{H}_{Y}$61-200	20	30	22					
J$^{H}_{Y}$61-250	25	37.5	27.5					
J$^{H}_{Y}$61-320	32	48	35.2					
J61Y-P_{54}/100v	P_{54}100V	30	11	10			≤540	蒸汽 Steam
J61Y-P_{54}/140v	P_{54}140V	42	15.4	14				
J61Y-P_{54}/170v	P_{54}170V	48	36	17				
J61Y-P_{55}/100v	P_{55}100V	38	28		10		≤550	
J61Y-P_{55}/140v	P_{55}140V	48	36		14			
J61Y-P_{55}/170v	P_{55}170V	53	39		17			
J61Y-P_{57}/100v	P_{57}100V	48	36			10	≤570	
J61Y-P_{57}/140v	P_{57}140V	55	40			14		
J61Y-P_{57}/170v	P_{57}170V	60	44			17		

三千控制阀网 www.cv3000.com

主要零件材料：Materials for main parts

零件名称 Part name	阀体 Body	阀盖 Bonnet	阀杆 Stem	密封面 seal face	阀瓣 Disc	填料 Packing	阀杆螺母 Yoke nut	手轮 Hand wheel	紧固件 Fastener
J61$^{H}_{Y}$(type)型 J961$^{H}_{Y}$(type)型	25 WCB	25 40Cr	铬不锈钢 铬钼铝钢氮化 Cr.stainless steel Cr.Mo.Al steel nitration	铬不锈钢 Cr.stainless steel	铬不锈钢 Cr.stainless steel	柔性石墨 Flexible graphite	ZQAL 9-4 铝青铜 Al bronze	可锻铸铁 Forgeable cast-iron	优质碳钢, 铬钼钢 High-grade carbon steel, Cr.Mo. steel
J61$^{H}_{Y}$(type)型 J961$^{H}_{Y}$(type)型	25 WCB	25 40Cr	铬不锈钢 铬钼铝钢氮化 Cr.stainless steel Cr.Mo.Al steel nitration	25	硬质合金 Hard alloy	柔性石墨 Flexible graphite	ZQAL 9-4 铝青铜 Al bronze	可锻铸铁 Forgeable cast-iron	优质碳钢, 铬钼钢 High-grade carbon steel, Cr.Mo. steel
J61Y-P_{54}(type)型 J961Y-P_{54}(type)型	ZG20CrMoV 12Cr1Mo1V	12Cr1Mo1V	20Cr1Mo1VA 25Cr2Mo1VA	12Cr1Mo1V	硬质合金 Hard alloy	柔性石墨 Flexible graphite	ZQAL 9-4 铝青铜 Al bronze	可锻铸铁 Forgeable cast-iron	铬钼钢 Cr.Mo. steel
J61Y-P_{55}(type)型 J961Y-P_{55}(type)型	ZG15CrMoV 12Cr1Mo1V	12Cr1Mo1V	20Cr1Mo1VA 25Cr2Mo1VA	12Cr1Mo1V	硬质合金 Hard alloy	柔性石墨 Flexible graphite	ZQAL 9-4 铝青铜 Al bronze	可锻铸铁 Forgeable cast-iron	铬钼钢 Cr.Mo. steel
J61Y-P_{57}(type)型 J961Y-P_{57}(type)型	ZG15CrMoV 12Cr1Mo1V	12Cr1Mo1V	20Cr1Mo1VA 25Cr2Mo1VA	12Cr1Mo1V	硬质合金 Hard alloy	柔性石墨 Flexible graphite	ZQAL 9-4 铝青铜 Al bronze	可锻铸铁 Forgeable cast-iron	铬钼钢 Cr.Mo. steel

高温高压电站截止阀
HIGH TEMPERATURE & HIGH PRESSURE POWER STATION STOP VALVE

J61H-100、200、250、320
J61Y-P55/100V、P55/140V、P55/170V

J61Y-P54/100V、P54/140V、P54/170V
J61Y-P57/140V、P57/140V、P57/170V

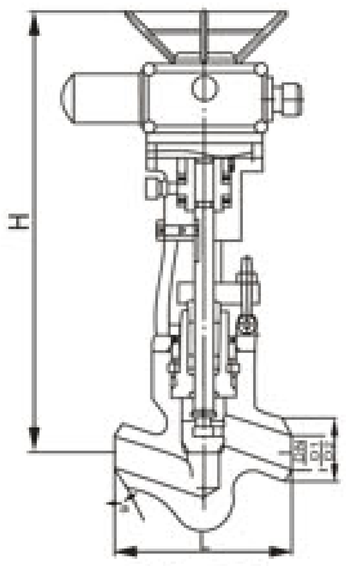

DN < 50

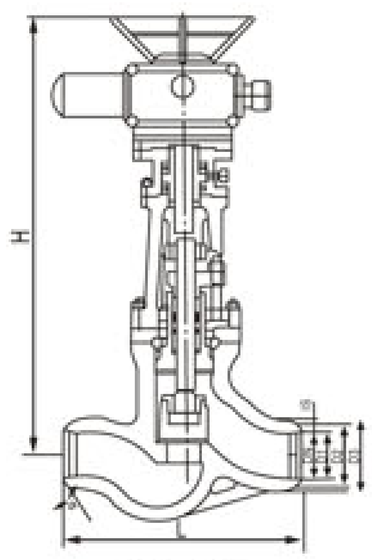

DN ≥ 100

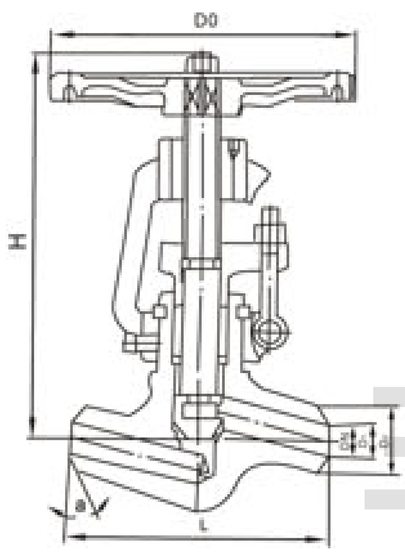

DN10-25

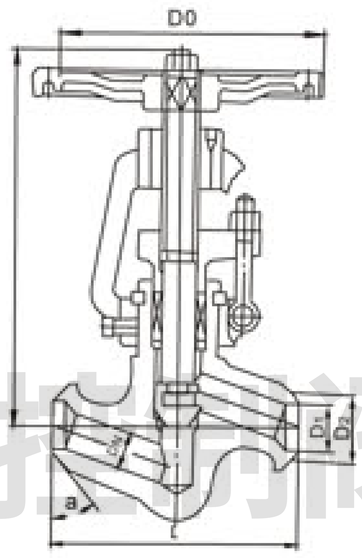

DN32

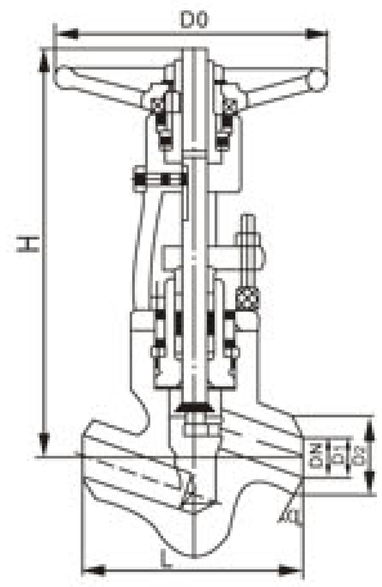

DN50

三千控制阀网 www.cv3000.com

主要连接及外形尺寸 Main connection and external dimensions(mm)

公称通径 DN(mm) Nominal diameter	主要外形尺寸及连接尺寸(mm) Main external and connection dimensions							重量(kg) Weight
	L	D1	D2	D3	a	H	D0	
J61 H/Y -100、200、250、320 J61Y-P54/100V、P54/140V、P54/170V								
10	120	12	25	–	40°	185	140	2.8
15	170	17	36	–	40°	247	200	7.5
20	170	22	42	–	40°	248	200	9
25	170	26	42	–	40°	248	240	9.5
32	170	31	44	–	40°	248.5	280	15
50(1)	250	50	82	–	32°	450	320	60
50(2)	350	50	82	–	32°	450	320	64
65	430	69	100	110	32°	669	400	74
80	470	84	108	130	32°	669	450	112.5
100	560	107	144	165	32°	755	500	178.5
注：DN50为两种型号。 Note: Two types for DN50.								
J61-P55/100V、P55/140V、P55/170V、 J61Y-P57/100V、P57/140V、P57/170V								
10	120	12	28	–	40°	189	140	3
15	170	17	40	–	40°	250	200	9
20	170	22	46	–	40°	252	200	11
25	170	26	46	–	40°	254	240	13
32	170	31	49	–	40°	254	280	17
50(1)	250	50	90	–	32°	453	320	68
50(2)	350	50	90	–	32°	455	320	72
65	430	69	104	115	32°	630	400	83
80	470	84	110	140	32°	672	450	118
100	560	107	148	170	32°	761	500	185

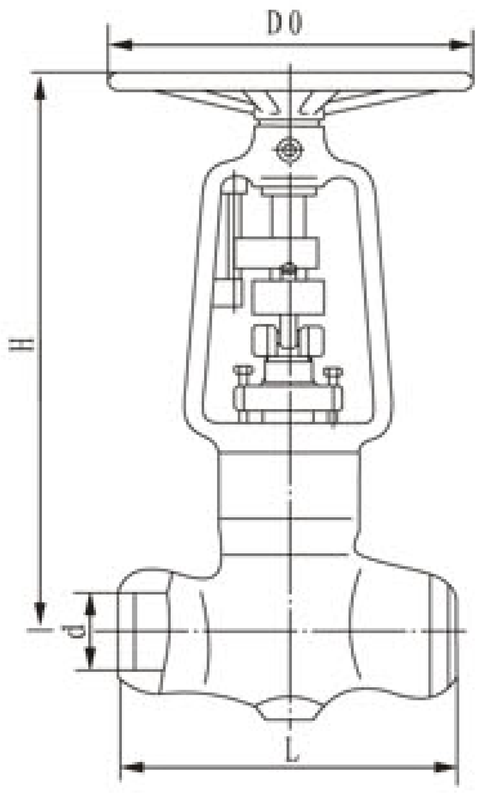

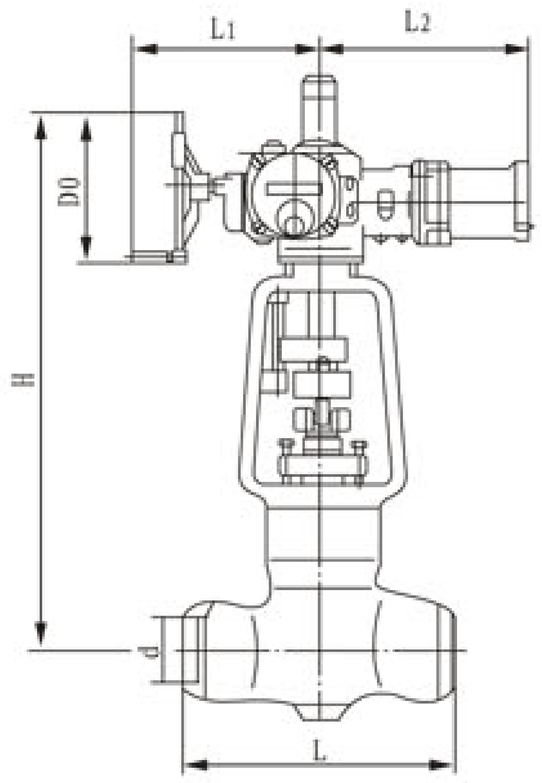

制造验收技术标准：Standard of manufacture and check before acceptance.

1、制造验收技术条件按日本火力发电阀门标准E 101的 规定。

2、阀门结构长度按 E 101的规定。

3、阀体焊接坡口按ANSI/B 16.25规定或按用户提供的尺寸。

1.The manufacture and acceptance shall be based on the Japanese valve standard E 101 applied for thermal power.

2.The length shall be in line with E 101 .

3.Valve body welding groove shall be in accordance with ANSI B 16/25 or by users' specification.

三千控制阀网
www.cv3000.com

适用规范 Applicable specification

壳体材料 Shell material	适用温度(℃) Applicable temperature	适用介质 Applicable medium
ASTM A216 WCB	≤425	水、蒸汽 Water、steam
ASTM A217WC1	≤450	
ASTM A217WC6	≤550	
ASTM A217 WC9	≤590	

主要尺寸及重量 Main dimensions and weight

J61Y-1500Lb

公称通径 Nominal diameter DN(in)	主要外形尺寸及连接尺寸(mm) Main external and connecting dimensions				重量(kg) Weight
	d	L	H	D	
3"	65	390	820	510	160
4"	80	480	910	560	240
5"	103	580	985	610	270
6"	124	630	1105	800	440

主要零件材料：Materials for main parts

零件名称 Part name	材料牌号 Material trademark			
阀体 Body	WCB	WC1	WC6	WC9
阀瓣 Disc	25	15CrMoA	12Cr1Mo1VA	12Cr1Mo1VA
阀盖 Bonnet	25	15CrMoA	12Cr1Mo1VA	12Cr1Mo1VA
阀座 Seat	25+硬质合金hard alloy	15CrMoA+硬质合金hard alloy	12Cr1Mo1VA+硬质合金hard alloy	12Cr1Mo1VA+硬质合金hard alloy
阀杆 Stem	1Cr17Ni2	1Cr17Ni2	SUH600	SUH600
			20Cr1Mo1VA	20CrMo1VA
支架 Yoke	WCB	WCB	WCB	WCB
		WC1	WC6	WC9
密封环 Sealing ring	S软钢(增强柔性石墨) S soft steel (Strengthened flexible graphite)		S软钢 S soft steel	F软钢 F soft steel
填料 Packing	增强柔性石墨 Strengthened flexible graphite			
阀杆螺母 Yoke nut	ZQAL 9-4			

主要连接及外形尺寸 Main connection and external dimensions(mm)

J61Y-2000Lb 、 J61Y-2500Lb

公称通径 DN(in) Nominal diameter	主要外形尺寸及连接尺寸 (mm)Main external and connection dimensions					重量(kg) Weight	
	D		L	H		D0		
2 1/2"	52Δ	47*	420	815Δ	840*	510	160	250
3"	62Δ	55*	470	895Δ	940*	560	200	290
4"	80Δ	73*	570	975Δ	1045*	610	270	350
5"	98Δ	88*	660	1045Δ	1275*	700	340	400
6"	120Δ	104*	760	1246Δ	1400*	800	470	500

注(Note)：Δ-J61Y-2000Lb *J61Y-2500Lb -J61Y-3500Lb

公称通径 DN(in) Nominal diameter	主要外形尺寸及连接尺寸 (mm)Main external and connection dimensions				重量(kg) Weight
	D	L	H	D0	
2 1/2"	38	480	890	460	235
3"	48	640	1030	560	425
4"	55	800	1155	610	500

公称通径 DN(in) Nominal diameter	主要外形尺寸及连接尺寸 (mm)Main external and connection dimensions						电动装置 Electric actuator	重量(kg) Weight
	D	L	H	D0	L_1	L_2		
J961Y-1500Lb								
3"	64	390	1030	305	400	555	SMC-00	265
			950	305	410	565	SMC-0	270
4"	84	480	1030	305	410	565	SMC-0	384
			1070	305	420	654	SMC-1	490
5"	100	580	1125	305	420	654	SMC-1	520
			1135	457	440	688	SMC-2	642
6"	125	630	1681	305	420	654	SMC-1	804
8"	158	770	1860	305	420	654	SMC-1	948
J961Y-2000Lb								
2 1/2"	50	420	975	305	410	565	SMC-0	340
			1015	305	420	654	SMC-1	406
3"	60	470	1060	305	410	565	SMC-0	388
			1095	305	420	654	SMC-1	470
4"	80	570	1220	305	420	654	SMC-1	542
			1235	457	440	688	SMC-2	606
5"	96	660	1425	457	440	688	SMC-2	646
			1500	610	690	-	SMC-3	874
6"	118	760	1480	457	440	688	SMC-2	780
			1560	610	690	-	SMC-3	1100
J961Y-2500Lb								
2 1/2"	46	420	975	305	410	565	SMC-0	390
			1015	305	420	654	SMC-1	600
3"	54	470	1065	305	410	565	SMC-0	430
			1095	305	420	654	SMC-1	640
4"	70	570	1220	305	420	654	SMC-1	700
			1235	457	440	688	SMC-2	722
5"	88	660	1425	457	440	688	SMC-2	772
			1500	610	690	-	SMC-3	810
6"	104	760	1480	457	440	688	SMC-2	872
			1560	610	690	-	SMC-3	917
J961Y-3500Lb								
2 1/2"	38	480	945	305	400	555	SMC-00	342
			1025	305	410	565	SMC-0	375
3"	48	640	1150	305	410	565	SMC-0	565
			1185	305	420	654	SMC-1	675
4"	60	762	1290	305	710	565	SMC-0	810
			1300	457	440	688	SMC-2	872
5"	74	864	1530	457	440	688	SMC-2	920
6"	88	965	1725	610	690	-	SMC-3	1100

三 控制阀网
www.cv3000.com

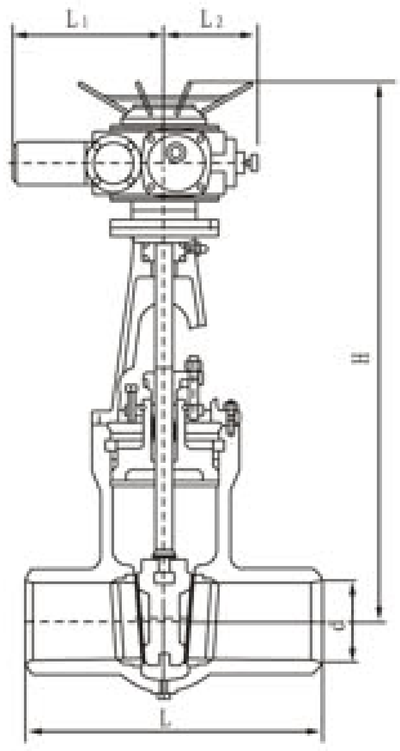

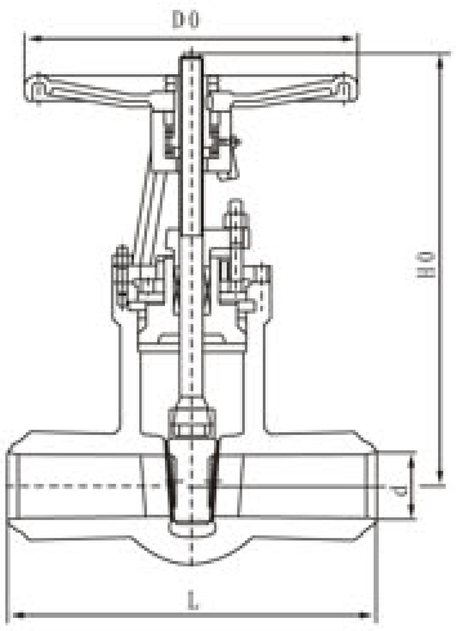

执行标准 Execution standards

1、制造与验收技术条件按日本火力发电用阀门标准E101和JB/T3595-93的规定。

2、结构长度按E101的规定或按用户提供尺寸。

3、焊接坡口按电力工业管理标准78DG的规定或按用户提供尺寸。

1.The manufacture and acceptance shall be based on the Japanese valve standard E101 applied for thermal power and JB/T3595-93.

2.The length shall be in line with E101 or by user's specification.

3.Welding groove shall be in accordance with power industry specification 78DG or by user's specification.

结构优势与特点 Structure advantages and features:

1、本系列阀门采用先进的工艺及直通结构，极大降低了流阻系数与能量的损耗，显著提高了阀门使用寿命和性能。

2、阀门中腔采用压力自紧式密封结构、密封性能好。支管两端为焊接结构。

3、闸板与阀座密封面采用司太立(stellite)钴基硬质合金堆焊而成，耐磨、耐高温、耐腐蚀、抗擦伤性能好。

4、阀杆经调质和表面氮化处理，具有良好的抗腐蚀性和抗擦伤性。

5、启闭件的结构可根据用户要求设计成单板、双板、平行双板等不同形式。

1. This series of valve adopt advanced technics and straight through structure which greatly reduce the flow resistance coefficient and energy loss, enhancing the valve working life and performance remarkably.
2. Middle cavity of the valve adopts self-tighten pressure sealing structure which assures high sealing performance. Both ends of the branch pipe are welding structure.
3. The disc and the seat sealing face are bead welded by Stellite cobalt base alloy with good property of wearable, high-temperature resistance, corrosion proof and scratch resistance.
4. By tempering and surface nitriding treatment, the stem takes on a good property of corrosion resistance and scratch resistance.
5. The structure of the switch part can be designed into different forms of single plate, double plate and parallel double plate as user required.

三千控制阀网 www.cv8000.com

主要性能规范：Main property and specification

型号 Type	公称压力PN(MPa) Nominal pressure	试验压力(MPa) Test pressure		工作压力(MPa) Working pressure	工作温度(℃) Working temperature	适用介质 Applicable medium available
		强度试验 strength	密封试验/上密封试验 Back seal test			
Z96$^{0}_{2}$Y-250	25	37.5	27.5		≤425	水、蒸汽 Water、steam
Z960Y-320	32	48.0	36.0		≤425	
Z960Y-P$_{54}$100	P$_{54}$10	30.0	22.0	10	≤540	蒸汽 steam
Z96$^{0}_{2}$Y-P$_{54}$140	P$_{55}$14	37.5	27.5	14	≤550	
Z960Y-P$_{54}$170	P$_{55}$17	48.0	36.0	17	≤540	
Z960Y-P$_{57}$170	P$_{57}$17	61.8	41.2	17	≤570	

主要零件材料：Materials for main parts

零件名称 Part name	材料牌号 Material trademark		
阀体 Body	WCB	WC6、ZG20crmov	WC9、ZG15cr1mo1v
闸板 Disc	WCB	WC6、ZG20crmov	WC9、ZG15cr1mo1v
阀盖 Bonnet	25	12Cr1Mo1VA	
阀杆 Stem	1Cr17Ni12	38CrMoA1A	
阀座 Seat	25	12Cr1Mo1VA	
密封环 Sealing ring	S软钢(增强柔性石墨) S soft steel (strengthened flexible graphite)		F软钢(增强柔性石墨)F soft steel (strengthened flexible graphite)
填料 Packing	增强柔性石墨 Strengthened flexible graphite		
支架 Yoke	WCB	WCBorWC6	
阀杆螺母 Yoke nut	ZQAL 9-4		
四开环 Four piece ring	1Cr13	38CrMoA1A	

根据用户要求可提供气动、液动和齿轮传动闸阀产品。
Pneumatic、 hydraulic and gear driving gate valves can be provided per users' requirement.

主要连接及外形尺寸 Main connection and external dimensions(mm)

公称通径DN(mm) Nominal diameter	主要外形及连接尺寸(mm) Main external and connecting dimensions						电动装置 Electric actuator
	d	L	H	H0	L_1	L_2	
Z960Y-200 Z961Y-200 Z962Y-200							
50	50	250	720	408	371	219	ZB20
65	67	400	895	620	371	219	ZB25
80	80	470	950	635	371	219	ZB40
100	101	550	1000	650	515	295	ZC45
125	138	600	1090	720	515	295	ZC60
150	164	600	1260	728	540	290	ZC90
175	182	750	1240	885	540	290	ZC90
200	204	800	1450	1002	540	290	ZC90
225	243	850	1590	1138	540	290	ZC120
250	275	900	1710	1116	565	305	ZC180
275	298	1047	1988	1390	565	305	ZC250
300	321	1194	2265	1665	565	305	ZC250
325	340	1245	2414	1800	770	400	ZC350
350	357	1250	2536	1936	770	400	ZC500
375	386	1317	2665	2066	770	400	ZC500
400	416	1384	3195	2100	794	466	ZC800
425	434	1400	3085	2190	794	466	ZC800
450	460	1346	3370	2280	794	466	ZC1000
500	517	1473	3580	2485	794	466	ZC1000
Z960Y-250 Z961Y-250 Z962Y-250							
50	50	250	720	408	371	219	ZB20
65	67	400	895	620	371	219	ZB40
80	80	470	950	635	515	295	ZC45
100	102	483	1164	650	515	295	ZC60
125	126	559	1250	720	540	290	ZC90
150	158	600	1260	728	540	290	ZC90
175	170	750	1650	885	540	290	ZC120
200	196	800	1450	1002	540	290	ZC120
225	210	850	1650	1138	565	305	ZC180
250	265	900	1710	1116	565	305	ZC250
275	284	1047	1988	1390	565	305	ZC250
300	302	1194	2062	1665	770	400	ZC350
325	328	1245	2415	1800	770	400	ZC500
350	346	1250	2536	1936	794	466	ZC800

注：焊接口“d”尺寸可根据用户要求制造。
Note: The dimension of the welding groove "d" can be manufactured by users' requirement.

三千控制阀网 www.cv3000.com

主要连接及外形尺寸 Main connection and external dimensions(mm)

公称通径DN(mm) Nominal diameter	主要外形及连接尺寸(mm) Main external and connecting dimensions						电动装置 Electric actuator
	d	L	H0		L_1	L_2	
375	369	1300	3181	2086	794	266	ZC800
Z960Y-320 Z961Y-320 Z962Y-320							
100	98	550	1000	650	515	295	ZC60
125	128	600	1090	720	540	290	ZC90
150	148	600	1260	728	540	290	ZC90
175	168	750	1330	885	540	290	ZC120
200	203	800	1450	1002	540	290	ZC120
225	196	850	1590	1138	565	305	ZC180
250	255	900	1710	1116	565	305	ZC250
275	280	1047	1988	1390	565	305	ZC250
300	306	1194	2265	1665	770	400	ZC350
325	330	1245	2415	1800	770	400	ZC500
Z960Y-P54100 Z961Y-P54100 Z962Y-P54100							
50	50	250	720	408	371	219	ZB20
65	67	400	895	620	371	219	ZB25
80	80	470	950	635	371	295	ZB40
100	101	550	1000	650	515	295	ZC45
125	138	600	1090	720	515	295	ZC60
150	164	600	1260	728	540	290	ZC90
175	187	750	1330	885	540	290	ZC90
200	204	800	1450	1002	540	290	ZC90
225	232	850	1590	1128	540	290	ZC120
250	277	900	1710	1116	565	305	ZC180
275	298	1047	1988	1390	565	305	ZC180
300	321	1194	2265	1665	565	305	ZC250
325	340	1245	2414	1800	770	400	ZC350
350	357	1250	2536	1936	770	400	ZC500
375	386	1317	2665	2066	770	400	ZC500
400	416	1384	3195	2100	794	466	ZC800
425	434	1400	3285	2190	794	466	ZC800
450	460	1346	3370	2280	794	466	ZC1000
500	512	1473	3580	2485	794	466	ZC1000
Z960Y-P54170 Z961Y-P54170 Z962Y-P54170							
50	50	250	720	408	371	219	ZB20
65	67	400	895	620	371	219	ZB25
80	80	470	950	635	515	295	ZB45
100	101	550	1000	650	515	295	ZC60
125	124	600	1090	720	540	290	ZC90
150	146	600	1260	728	540	290	ZC90
175	169	750	1330	885	540	290	ZC120

三千控制阀网 www.cv3000.com

主要连接及外形尺寸 Main connection and external dimensions(mm)

公称通径DN(mm) Nominal diameter	主要外形及连接尺寸(mm) Main external and connecting dimensions						电动装置 Electric actuator
	d	L	H	H0	L_1	L_2	
200	186	800	1450	1002	540	290	ZC120
225	207	850	1590	1138	565	305	ZC180
250	255	900	1710	1116	565	305	ZC250
275	256	1047	1988	1390	565	305	ZC250
300	306	1194	2265	1665	770	400	ZC350
325	330	1245	2415	1800	770	400	ZC500
350	353	1250	2536	1936	794	266	ZC800
375	378	1317	2665	2066	794	266	ZC800
Z960Y-P55140V Z961Y-P55140V Z962Y-P55140V							
50	50	250	720	408	371	219	ZB20
65	67	400	895	620	371	219	ZB25
80	80	470	950	635	515	295	ZB45
100	101	550	1000	650	515	295	ZC60
125	136	600	1090	720	540	290	ZC90
150	158	600	1260	728	540	290	ZC90
175	179	750	1330	885	540	290	ZC120
200	196	800	1450	1002	540	290	ZC120
225	221	850	1590	1138	565	305	ZC180
250	265	900	1710	1116	565	305	ZC250
275	284	1047	1988	1390	565	305	ZC250
300	307	1194	2265	1665	770	400	ZC350
325	328	1245	2415	1800	770	400	ZC500
350	346	1250	2536	1936	794	266	ZC800
375	369	1317	2665	2066	794	266	ZC800
Z960Y-P55170 Z961Y-P55170 Z962Y-P55170							
50	50	250	720	408	371	219	ZB20
65	67	400	895	620	371	219	ZB25
80	80	470	950	635	515	295	ZC45
100	101	550	1000	650	515	295	ZC60
125	124	600	1090	720	540	290	ZC90
150	146	600	1260	728	540	290	ZC90
175	169	750	1330	885	540	290	ZC120
200	190	800	1450	1002	540	290	ZC120
225	201	850	1590	1138	565	305	ZC180
250	255	900	1710	1116	565	305	ZC250
275	258	1041	1988	1390	565	305	ZC250
300	306	1194	2265	1665	770	400	ZC350
325	310	1245	2415	1800	770	400	ZC500
350	353	1250	2536	1936	794	266	ZC800
375	356	1317	2665	2066	794	266	ZC800

三千控制阀网 www.cv3000.com

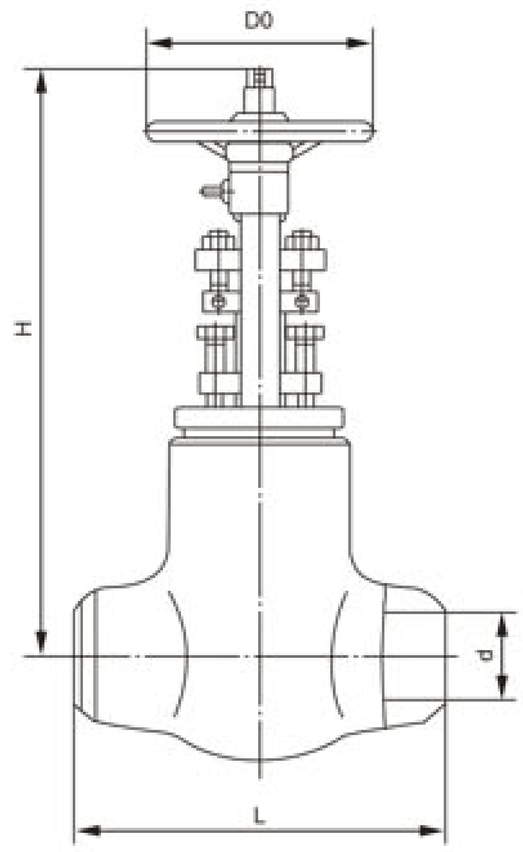

制造验收技术标准 Standard of manufacture and check before acceptance

1、制造验收技术条件按日本火力发电用阀门标准E101的规定。

2、阀门结构长度按E101的规定。

3、阀体焊接坡口按ANSI B16.25的规定或按用户提供的尺寸。

1.The manufacture and acceptance base on the Japanese valve standard E101applied for thermal power .

2.The length shall be in line with E101.

3.Valve body welding groove shall be in accordance with ANSI B16.25 or by user's specification.

三下控制阀网
www.cv3000.com

主要性能规范：Main property and specification

壳体材料 Shell material	适用温度(℃) Applicable temperature	适用介质 Applicable medium
ASTM A216 WCB	≤425	蒸汽 Steam 水 Water
ASTM A217 WC1	≤450	
ASTM A217 WC6	≤550	
ASTM A217 WC9	≤590	

主要零件材料：Materials for main parts

零件名称 Part Name	材料牌号 Material trademark			
阀体 Body	WCB	WC1	WC6	WC9
闸板 Disc	WCB	WC1	WC6	WC9
阀盖 Bonnet	25	15CrMoVA	12Cr1Mo1VA	12Cr1Mo1VA
	WCB	WC1	WC6	WC9
阀座 Seat	25	12Cr1Mo1VA	12Cr1Mo1VA	12Cr1Mo1VA
阀杆 Stem	1Cr17Ni2	1Cr17Ni2	SUH600	SUH600
	35Cr.Mo.A	35Cr.Mo.A	38CrMoA1A	38CrMoA1A
填料 Packing	增强柔性石墨 Strengthened flexible graphite			
支架 Bracket	WCB	WCB	WCB	WCB
		WC1	WC6	WC9
密封环 Sealing ring	S软钢 S soft steel			F软钢 F Soft steel
	增强柔性石墨 Strengthened flexible graphite			
阀杆螺母 Yoke nut	ZQAL 9-4			

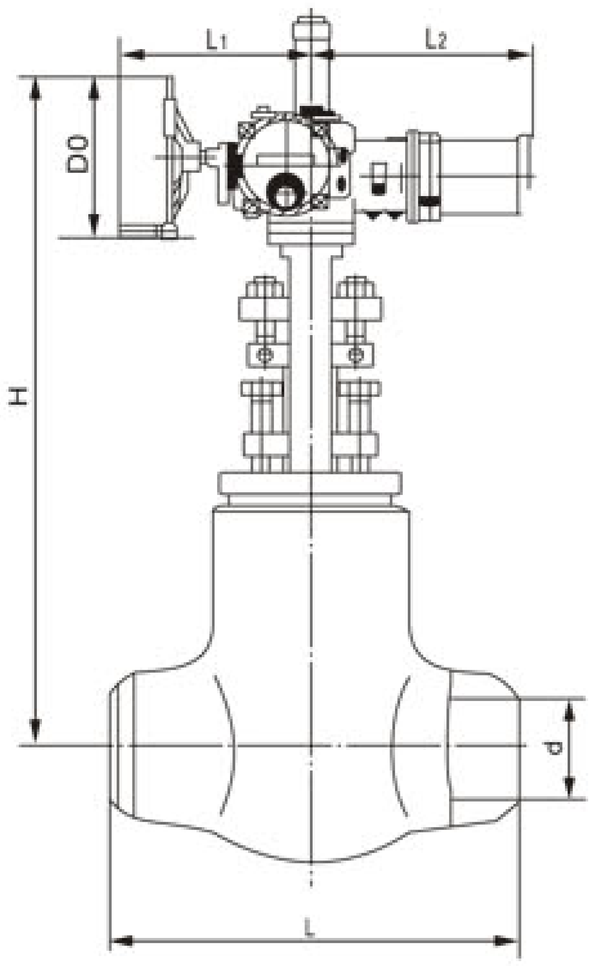

主要尺寸及重量 Main dimensions and weight

Z60Y-1500Lb

公称通径NPS(in) Nominal diameter	外形尺寸和连接尺寸External and connecting dimensions(mm)				重量(kg) Weight
	d	L	H	D0	
2 1/2"	56	254	671	200	48
3"	64	305	692	200	58
4"	84	406	790	230	98
5"	100	483	875	260	128
6"	126	559	1055	360	215
8"	158	711	1148	410	387

Z60Y-2000Lb

公称通径NPS(in) Nominal diameter	外形尺寸和连接尺寸External and connecting dimensions(mm)				重量(kg) Weight
	d	L	H	D0	
2 1/2"	50	330	640	200	50
3"	60	368	690	230	82
4"	80	457	806	260	134
5"	96	533	984	360	174
6"	118	610	1090	410	338

Z60Y-2500Lb

公称通径NPS(in) Nominal diameter	外形尺寸和连接尺寸External and connecting dimensions(mm)				重量(kg) Weight
	d	L	H	D0	
2 1/2"	46	330	639	200	70
3"	54	368	680	230	90
4"	70	457	805	260	142
5"	86	533	965	360	191
6"	104	610	1070	410	339

Z60Y-3500Lb

公称通径NPS(in) Nominal diameter	外形尺寸和连接尺寸External and connecting dimensions(mm)				重量(kg) Weight
	d	L	H	D0	
3"	44	440	745	260	196
4"	56	540	860	300	283

三千控制阀网
www.cv3000.com

主要尺寸及重量 Main dimensions and weight

公称通径DN(mm) Nominal diameter	主要外形及连接尺寸(mm) Main external and connecting dimensions						电装型号Electric actuator model	重量(kg) Weight
	d	L	H	D0	L_1	L_2		
Z960Y-1500Lb								
2 1/2"	56	254	520	200	140	243	SMC-04	93
3"	64	305	523	200	140	243	SMC-04	110
4"	85	406	599	508	198	281	SMC-03	168
			599	305	400	555	SMC-00	208
5"	100	483	678	508	198	281	SMC-03	189
			678	305	400	555	SMC-00	232
6"	126	559	793	305	410	565	SMC-0	358
			793	305	420	654	SMC-1	444
8"	158	711	813	305	410	565	SMC-0	517
			813	305	420	654	SMC-1	561
10"	200	864	998	457	440	688	SMC-2	852
			988	305	420	654	SMC-1	823
12"	250	991	1141	305	420	654	SMC-1	1122
			1156	457	440	688	SMC-2	1150
14"	280	1067	1249	610	690		SMC-3	1765
16"	318	1194	1351	610	690		SMC-3	2429
18"	360	1346	1535	610	690		SMC-3	2454
			1540	610	715		SMC-4	2524
20"	406	1437	1726	610	690		SMC-3	3334
			1731	610	715		SMC-4	3380
22"	450	1600	1921	610	690		SMC-3	4409
			1926	610	715		SMC-4	4648
Z960Y-2000Lb								
2 1/2"	50	330	540	200	140	243	SMC-04	202
3"	60	368	558	508	198	332	SMC-03	149
4"	80	457	654	305	400	555	SMC-00	245
5"	96	533	780	305	400	555	SMC-00	280
			780	305	410	565	SMC-0	323
6"	118	610	830	305	410	565	SMC-0	419
8"	148	762	960	305	410	565	SMC-0	626
			960	305	420	654	SMC-1	715
10"	180	914	1020	304	420	654	SMC-1	1020
			1024	457	440	688	SMC-2	1050
12"	222	1041	1150	457	440	688	SMC-2	1320
			1166	610	690		SMC-3	1358
14"	254	1118	1230	457	440	688	SMC-2	1810
			1240	610	690		SMC-3	1840
16"	294	1245	1330	610	690		SMC-3	2270
			1350	610	715		SMC-4	2300

三千控制阀网 www.cv3000.com

主要尺寸及重量 Main dimensions and weight

公称通径DN(mm) Nominal diameter	主要外形及连接尺寸(mm) Main external and connecting dimensions						电装型号Electric actuator model	重量(kg) Weight
	d	L	H	H0	L_1	L_2		
Z960Y-2500Lb								
2 1/2"	46	330	533	508	198	332	SMC-03	143
			533	200	140	243	SMC-04	116
3"	54	368	549	508	198	332	SMC-03	160
			549	200	140	243	SMC-04	134
4"	70	457	653	508	198	332	SMC-03	251
			644	305	410	565	SMC-0	294
5"	86	533	760	305	400	555	SMC-00	324
			774	305	400	565	SMC-0	341
6"	104	610	850	305	400	555	SMC-00	479
			861	305	410	565	SMC-0	564
8"	130	762	847	305	410	565	SMC-0	725
			860	305	420	654	SMC-1	750
10"	162	914	1021	305	420	654	SMC-1	1152
			1050	610	690		SMC-3	1220
12"	210	1041	1125	457	440	688	SMC-2	1520
			1149	610	690		SMC-3	1558
14"	234	1118	1221	610	690		SMC-3	1869
16"	264	1245	1390	610	690		SMC-3	2826
			1395	610	715		SMC-4	3084
Z960Y-3500Lb								
3"	44	440	620	508	198	332	SMC-03	269
			623	305	400	555	SMC-00	305
4"	56	540	721	305	400	555	SMC-00	398
			730	305	410	565	SMC-0	437
5"	74	616	796	305	410	565	SMC-0	507
			796	305	420	654	SMC-1	592
6"	88	692	857	305	410	565	SMC-0	605
			857	305	420	654	SMC-1	691
8"	116	846	1041	305	420	654	SMC-1	1088
			1051	457	440	688	SMC-2	1179
10"	142	1000	1197	457	440	688	SMC-2	1700
			1207	610	690		SMC-3	2031
12"	174	1124	1338	610	690		SMC-3	2708
14"	196	1219	1455	610	715		SMC-4	3180
			1440	610	690		SMC-3	3131
18"	252	1499	1915	610	715		SMC-4	4560

三千控制阀网
www.cv3000.com

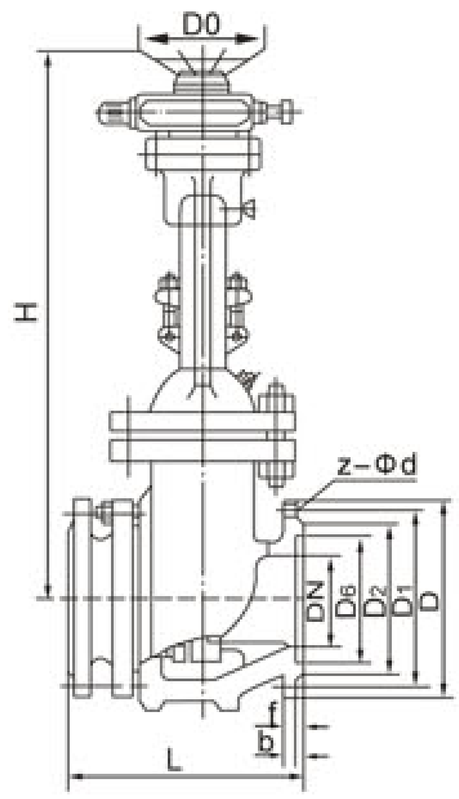

主要性能规范 Chief property and specification

试验压力(MPa) Test pressure	公称压力PN Nominal pressure(MPa)			
	1.6	2.5	4.0	6.4
壳体强度试验 Shell strength test	2.4	3.8	6.0	9.6
密封试验（液） Seal test (liquid)	1.76	2.8	4.4	7.0
密封试验（气） Seal test (gas)	0.6			
适用介质 Applicable medium	灰水混合物、渣水比1:6,最大粒度≤50mm Mortar mixture and dregs with proportion of 1:6, max particle size≤50mm			
适用温度 Applicable temperature	≤150℃			

结构长度 GB/T 12221-89 Face to face GB/T 12221-89

法兰标准 JB/T 79-94 Flange standard JB/T 79-94

主要尺寸及重量 Main dimensions and weight

公称压力PN(MPa) Nominal pressure	公称通径DN(in) Nominal diameter	主要外形尺寸及连接尺寸 Main external and connecting dimensions(mm)										重量(kg) Weight
		L	D	D_1	D_2	D_6	b	f	z-Φd	H	d_0	
1.6	50	250	160	125	100	–	16	3	4-18	335	250	60
	80	280	195	160	135	–	20	3	8-18	510	280	78
	100	300	215	180	155	–	20	3	8-18	685	300	96
	150	350	280	240	210	–	24	3	8-23	790	300	158
	200	400	335	295	265	–	26	3	12-23	885	350	222
	250	450	405	355	320	–	30	3	12-25	1015	400	289
	300	500	460	410	375	–	30	4	12-25	1190	450	365
	350	550	520	470	435	–	34	4	16-25	1350	500	558
	400	600	580	525	485	–	36	4	16-30	1460	500	850
	450	650	640	585	545	–	40	4	20-30	1620	550	1164
	500	700	705	650	608	–	44	4	20-34	1800	550	1482
2.5	50	250	160	125	100	–	20	3	4-18	335	250	99
	80	280	195	160	135	–	22	3	8-18	510	280	118
	100	300	230	190	160	–	24	3	8-23	685	300	147
	150	350	300	250	218	–	30	3	8-25	790	300	204
	200	400	360	310	278	–	34	3	12-25	885	350	273
	250	450	425	370	332	–	36	3	12-30	1015	400	373
	300	500	485	430	390	–	40	4	16-30	1190	450	478
	350	550	550	490	448	–	44	4	16-34	1350	500	680
	400	600	610	550	505	–	48	4	16-34	1460	500	1008
	450	650	660	600	555	–	50	4	20-34	1620	550	1344
	500	700	730	660	610	–	52	4	20-41	1800	550	1827
4.0	50	216	160	125	100	88	20	3	4-18	340	250	98
	80	283	195	160	135	121	22	3	8-18	508	300	126
	100.	305	230	190	160	150	24	3	8-23	680	300	156
	150	403	300	250	218	204	30	3	8-25	800	400	228
	200	413	375	320	282	260	38	3	12-30	875	500	298
	250	457	445	385	345	313	42	3	12-34	1010	500	372
	300	502	510	450	408	364	46	4	16-34	1180	550	450
	350	762	570	510	465	422	52	4	16-34	1245	600	530
	400	838	655	585	535	474	58	4	16-41	1280	600	610
	450	914	680	610	560	524	60	4	20-41	1415	700	690
	500	991	755	670	612	576	62	4	20-48	1560	750	772
6.4	50	250	175	135	105	–	26	3	4-23	340	250	142
	80	310	210	170	140	–	30	3	8-23	508	300	168
	100	350	250	200	168	–	32	3	8-25	680	300	210
	150	450	340	280	240	–	38	3	8-34	800	400	270
	200	550	405	345	300	–	44	3	12-34	875	500	367
	250	650	470	400	352	–	48	3	12-41	1010	500	450
	300	750	530	460	412	–	54	4	16-41	1180	550	532
	350	850	595	525	475	–	60	4	16-41	1245	600	548
	400	950	670	585	525	–	66	4	16-48	1280	600	615

三千阀网 www.cv300.com

排渣止回阀
SCUM CHECK VALVE

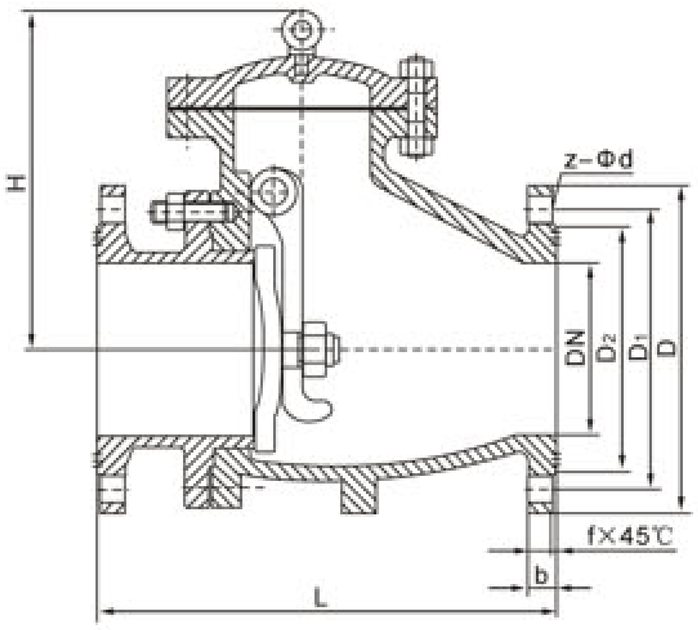

结构特点和用途：Structure characteristic and application

1、符合国内外先进标准的要求，密封可靠，启闭灵活，性能优良。
2、阀体采用分体式结构，维修更加方便。
3、阀座、阀瓣密封面堆焊耐磨合金，耐腐蚀、耐磨、抗擦伤性能好，使用寿命长。
4、阀门内腔光滑，通道设计流畅，能源损耗少。

1. It meets the requirements of the domestic and oversea advanced standard and provides reliable sealing, flexible switching and good performance.
2.The valve body adopts separated structure which makes maintenance much more convenient.
3.The sealing face of valve seat and disc is bead welded by wear resisting alloy, providing a good performance of corrosion resistance, abrasion proof, scratch resistance and a long working life.
4.With smooth inner cavity of the valve, streamlined passage design and small energy loss.

主要性能规范：Main property and specification

型号 Model	公称压力 PN(MPa) Nominal pressure	试验压力Ps(MPa) Test pressure		工作温度 (℃) Working temperature	工作压力 P(MPa) Working pressure	适用介质 Applicable medium
		强度strength	密封seal			
PH44H-10C	1.0	1.5	1.1	≤200	1.0	灰水混合物，渣水比1:6，最大粒度≤50mm Mortar mixture and dregs with proportion of 1:6, max particle size≤50mm
PH44H-16C	1.6	2.4	1.76		1.6	
PH44H-25	2.5	3.8	2.8		2.5	

主要零件材料：Materials for main parts

零件名称 Part name	阀体 Body 阀盖 Bonnet	阀座 Seat	阀瓣 Disc
材料 Material	WCB	WCB+耐磨钢 wear resisting steel	25+耐磨钢 wear resisting steel

主要尺寸及重量 Main dimensions and weight

型号 Model	公称通径DN(mm) Nominal diameter	主要外形尺寸及连接尺寸 Main external and connecting dimensions(mm)								重量(kg) Weight
		L	D	D_1	D_2	Z-Φd	b	f	H	
PH44H-10C	80	241	200	160	135	4-Φ18	18	3	260	48
	100	292	220	180	155	8-Φ18	20	3	270	63
	150	356	285	240	210	8-Φ23	22	3	290	120
	200	495	340	295	265	8-Φ23	22	3	345	200
	250	622	395	350	320	12-Φ23	24	3	412	250
	300	698	445	400	368	12-Φ23	26	4	468	320
	350	787	505	460	428	16-Φ23	26	4	524	400
	400	900	565	515	482	16-Φ25	26	4	600	517
	450	918	615	565	532	20-Φ25	26	4	670	610
	500	978	670	620	585	20-Φ25	28	4	750	705
PH44H-16C	80	241	200	160	135	8-Φ18	20	3	260	48
	100	292	220	180	155	8-Φ18	20	3	270	63
	150	356	285	240	210	8-Φ23	22	3	290	130
	200	495	340	295	265	12-Φ23	24	3	345	210
	250	622	405	355	320	12-Φ26	26	3	412	260
	300	698	460	410	375	12-Φ26	28	4	468	330
	350	787	520	470	435	16-Φ26	32	4	524	415
	400	900	580	525	485	16-Φ30	36	4	600	532
	450	918	640	585	545	20-Φ30	38	4	670	625
	500	978	715	650	608	20-Φ34	42	4	750	720
PH44H-25	80	318	200	160	135	8-Φ18	22	3	260	48
	100	356	235	190	160	8-Φ23	24	3	270	65
	150	444	300	250	218	8-Φ25	28	3	290	140
	200	535	360	310	278	12-Φ25	30	3	345	230
	250	622	425	370	332	12-Φ30	32	3	412	280
	300	711	485	430	390	16-Φ30	36	4	648	350
	350	838	555	490	448	16-Φ34	40	4	524	440
	400	864	620	550	505	16-Φ34	44	4	600	550
	450	978	670	600	555	20-Φ34	46	4	670	650
	500	1016	730	660	610	20-Φ41	48	4	750	745

三工控制阀网 www.cv2000.com

175H48Y(H)-200 空排止回阀 NO-LOAD RUNNING CHECK VALVE

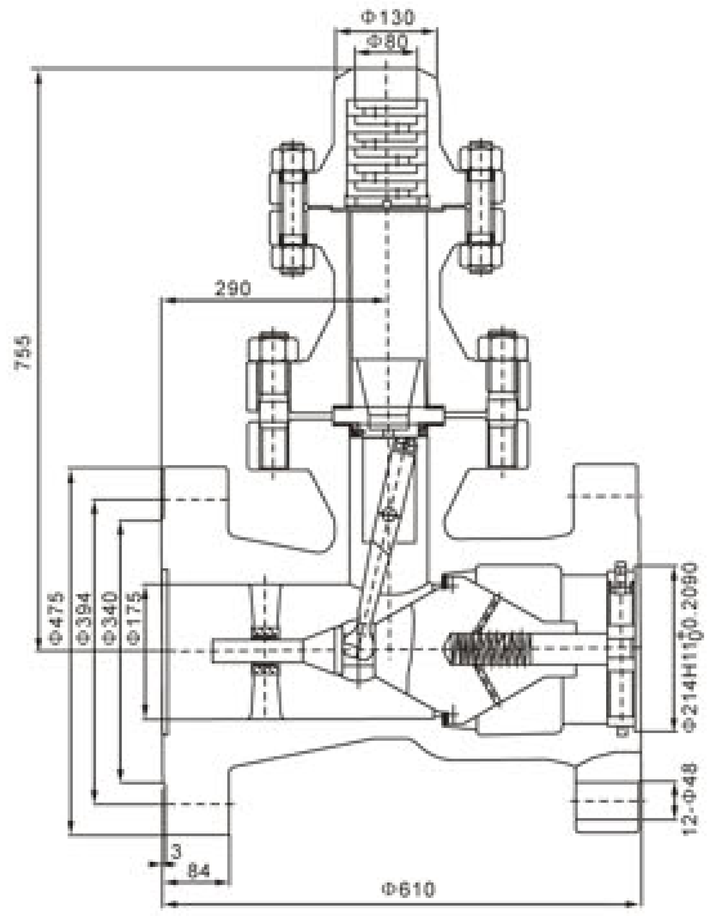

175H48Y(H)-200型空排止回阀为我公司开发的最新产品，主要用于火电厂给水泵出口处。配合水泵最小流量再循环阀工作。维持系统的安全运行。

175H48Y(H)-200 Type no-load running check valve, newly developed by our company, is mainly used at the outlet of feed water pump in heat engine plant, fitting for recycle valve of the water pump work at min. flux and maintaining safe running of system.

动作原理如下 Below action principle:

打开出口阀，给水泵启动，给水达到一定的压力后，阀芯自动升起，推离阀座，给水即流出。同时阀芯连杆拨动排空口阀片封闭排空口，当给水泵流量减小时，阀芯下落，推动连杆拨开排空阀片，开启再循环阀门维持水泵最小流量。当停泵时，阀芯自动下落关闭通道，从而防止高压水锤对给水系统的破坏。

Opening the outlet valve and starting the feed water pump, when the water is up to certain pressure, the valve core will rise automatically and push away the valve base, then the water will flow out. Meanwhile the valve core pitman pushes valve plate at the exhausting outlet and shut off the exhausting outlet. When the flux of feed water pump reduces, the valve core will fall, and then the connecting lever will move and push the exhaust valve plate aside. The recycle valve will open and maintain min. flux of water pump. When the pump stops, the valve core will fall automatically and switch off the passage so as to keep water service system from high-pressure water hammering.

三千控制阀网 www.cv3000.com

主要性能规范：Main property and specification

公称压力 Nominal pressure PN(MPa)	壳体试验压力 Shell test pressure PS (MPa)	工作压力 Working pressure PS (MPa)	适用介质 Suitable medium	工作温度 Working temperature(℃)
20.0	30.0	20.0	水 Water	≤160

主要零件材料：Materials for main parts

零件名称 Part name	材料 Material
阀体、定位轮、连接法兰、排气法兰、法兰盖 Valve body, locating wheel, flange for connecting, flange for exhausting, flange cover	碳铸钢 Carbon cast steel
导向轴、拨叉、轴套、滑块、排放套、排气盘 Guiding shaft, shift lever, shaft sleeve, sliding block, discharging sleeve, exhausting plate	不锈钢 Stainless steel
螺栓、螺柱 Bolt、stud	铬钼钢 Cr.Mo.steel
衬套 Valve bush	铸铝青铜 Casting aluminium bronze
阀瓣、阀瓣体、阀瓣轴、连接叉、螺母 Disc, disc body, disc spindle, yoke, nut	优质碳素钢 High-grade carbon steel

真空隔离截止阀
VACUUM-ISOLATING GLOBE VALVES

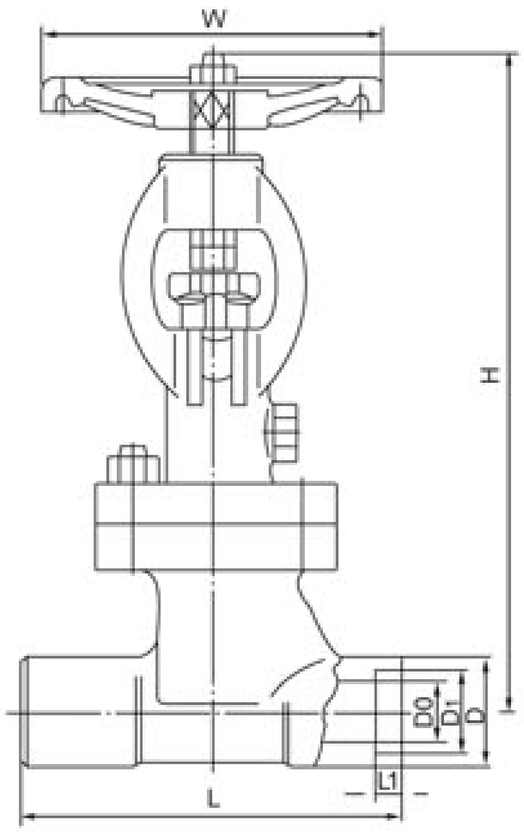

DN≤32

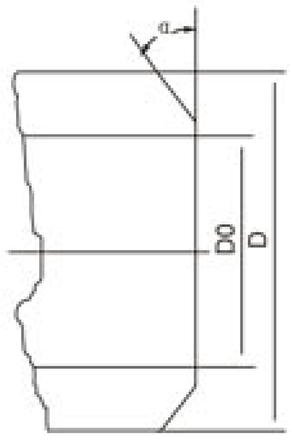

DN32-100

主要结构特点及用途 Main structure characteristic and application

1.本系列阀门主体采用铸锻结构，具有平行双密封副半强制双向密封，密封面到位运动和楔形块楔紧运动分步作用实现零泄漏。

2.密封面运动磨擦力小、启闭轻便、而且密封面磨损有自动补偿功能。

3.结构简单、紧凑、检修方便，使用寿命长，达十几年。

4.阀盖填料室设有真空密封结构，具有自胀压紧作用，并且各接合面采用高强膨胀材料密封，使系统与大气完全隔离，且有很好的系统气密性。

5.本系列阀门连接形式分法兰、焊接两种，驱动方式有手动、电动两种。 该阀门适用于工作温度≤425℃和≤550℃,工作介质为水、蒸气或空气的管路上，作为启闭装置；尤其适用于火电厂汽机冷凝和真空负压系统，起 真空隔离密封作用。

1. The main body of this series of valve adopts a casting and forging structure, owning parallel dual-sealing pair with semi-forced double direction sealing effect. It realizes zero leakage by separate effect of motions of both sealing face to its due position and the tapered block to wedge up.

2.The sealing face is of a small frictional force of motion switch ,lightly and has a self compensation function for sealing face wearing.

3.Simple and compact structure, convenient to maintain, up to more than 10 years of long duration.

4.A vacuum sealing structure is set in the filling chamber on the valve cover, which has the effect of self-expanding and impacting. And joint faces are sealed with the expansive material of high strength to completely isolate the system from air. Thus, achieving a terrific systematic air tightness.

5. This series of valve can be divided into flange type and welding type by connecting forms and has two driving modes of manual and electrical. This valve is suitable for applying as a switch device in pipeline with medium of water, steam and air under working temperature of ≤425℃ and ≤550℃.Especially suitable for condensing engine and vacuum system in heat-engine plant, having a good property of vacuum isolating sealing.

三千控制阀网 www.cv3000.com

主要性能规范：Main property and specification

产品类型 Product type	产品强度试验(MPa) Product strength test	上密封试验(MPa) Back seal test	密封试验(Mpa) Seal test	适用介质 Applicable medium	适用温度 Applicable temperature
NKJ61H-40	6.0	4.4	4.4	水、蒸气 空气 Water, steam, air	≤425°C
NkJ61H-64	9.6	7.0	7.0		
NKJ61H-100	15.0	11.0	11.0		
NKJ61H-40I	6.0	4.4	4.4		≤550°C
NKJ61H-64I	9.6	7.0	7.0		
NKJ61H-100I	15.0	11.0	11.0		

主要零件材料：Materials for main parts

零件名称 Part name	阀盖、阀体 Body、bonnet	阀杆 Valve stem	阀瓣 Disc	密封面 Sealing face	阀杆螺母 Yoke nut	填料 Packing	紧固件 Fastener
NKJ61-C(type)型	25 (or)或WCB	铬不锈钢 Cr.stainless steel	铬不锈钢 Cr.stainless steel	H:合金钢 H:alloy steel	ZQAL 9-4 铝青铜 Al bronze	膨胀复合石墨 Expanding compound graphite	优质碳钢 High-grade carbon steel
NKJ61-I(type)型	铬钼钢 Cr.Mo. steel	20Cr.1Mo.1VA	12Cr.Mo.1VA	Y:硬质合金 Y:hard alloy	ZQAL 9-4 铝青铜 Al bronze		铬钼钢Cr.Mo. steel

主要尺寸及重量 Main dimensions and weight

公称压力PN(MPa) Nominal pressure	公称通径 DN(in) Nominal diameter	主要外形尺寸及连接尺寸 Main external and connection dimensions(mm)								重量(kg) Weight
		L	H	D	D0	D_1	L_1	a	W	
4.0	10	130	245	36	11	18.4	10	–	120	6.5
	15	130	245	36	16	22.5	10	–	120	7
	20	150	265	44	21	28.5	11	–	160	7.8
	25	160	270	48	26	34.5	12	–	200	8.5
	32	180	285	48	34	–	–	37° 30′	200	12
	40	200	320	55	40	–	–	37° 30′	240	15
	50	230	365	64	48	–	–	37° 30′	320	25
	65	290	410	82	66	–	–	37° 30′	300	39
	80	310	430	95	78	–	–	37° 30′	300	50
	100	350	470	117	100	–	–	37° 30′	350	65
	125	400	500	143	126	–	–	37° 30′	350	72
	150	480	533	167	150	–	–	37° 30′	400	84
6.4	10	130	245	36	10	18.4	10	–	120	6.5
	15	130	245	36	15	22.5	10	–	120	7
	20	150	265	44	20	28.5	11	–	160	7.8
	25	160	270	48	25	34.5	12	–	200	8.5
	32	180	280	48	33	–	–	37° 30′	200	13
	40	200	320	55	39	–	–	37° 30′	240	17
	50	230	365	64	48	–	–	37° 30′	320	28
	65	290	410	82	65	–	–	37° 30′	320	41
	80	310	430	95	76	–	–	37° 30′	360	52
	100	350	470	117	98	–	–	37° 30′	400	68
	125	400	500	143	123	–	–	37° 30′	400	77
	150	480	533	167	148	–	–	–	500	89
10.0	10	210	245	36	10	18.4	10	–	120	7
	15	210	245	36	14	22.5	10	–	120	7.6
	20	230	265	44	20	28.5	11	–	160	8.7
	25	230	270	48	25	34.5	12	37° 30′	200	10.5
	32	260	285	48	32	–	–	37° 30′	200	16
	40	260	320	55	38	–	–	37° 30′	240	22
	50	300	355	64	48	–	–	37° 30′	320	33
	65	340	410	82	63	–	–	37° 30′	320	47
	80	380	430	95	74	–	–	37° 30′	360	61
	100	430	470	117	97	–	–	37° 30′	400	73
	125	500	500	143	123	–	–	37° 30′	400	79
	150	550	533	167	148	–	–	37° 30′	500	94

注：PM4.0（40）阀门允许作为PN1.0（25)压力级选用.

Note: Valve PN4.0 (40) is allowed for selection as pressure level PN1.0(25).

三千控制阀网 www.cv3000.com

真空隔离闸板阀
VACUUM-ISOLATING GATE VALVES

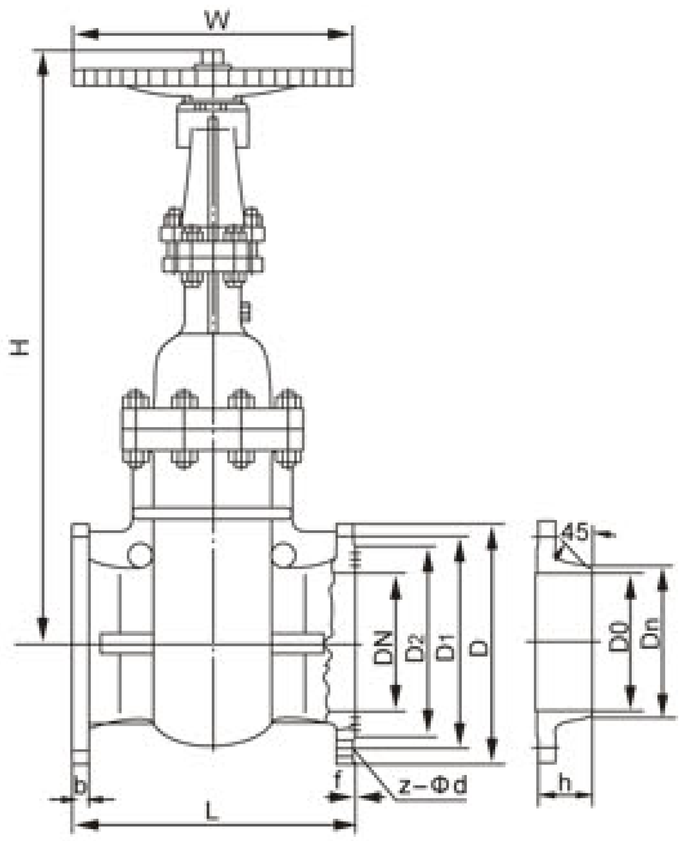

PN≤2.5MPa

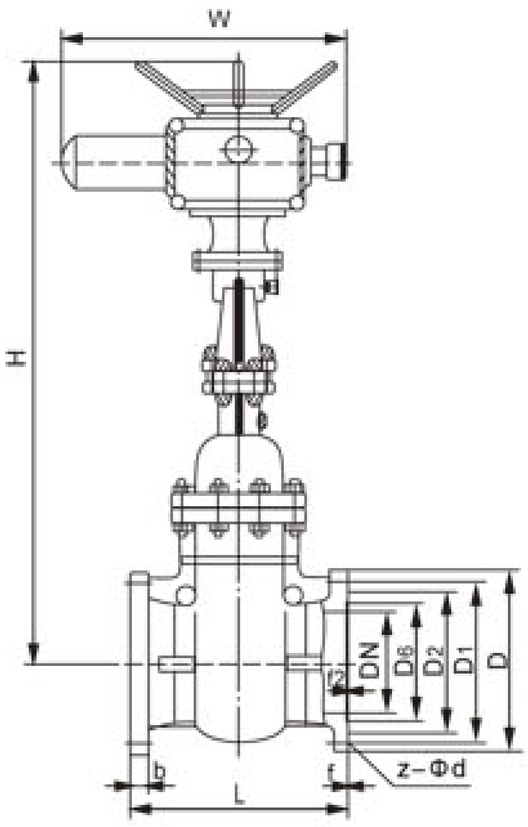

PN≥4.0MPa

主要性能规范：Main property and specification　使用范围 Applicable scope

试验压力 Test pressure

公称压力 PN(MPa) Nominal pressure	试验压力 Test pressure (MPa)		
	壳体强度试验 Shell strength test	上密封试验 Back seal test	密封试验 Seal test
2.5	3.8	2.8	2.8
4.0	6.0	4.4	4.4
6.4	9.6	7.0	7.0

产品类型 Product type	适用介质 Applicable medium	适用温度(℃) Applicable temperature
NKZ44H NKZ944H-C(type)型	水、蒸汽、空气 Water, steam, air	≤425
NKZ44H NKZ944H-I(type)型		≤500

三千控制阀网
www.cv3000.com

主要零件材料：Materials for main parts

零件名称 Part name	阀体、阀盖 Body bonnet	阀杆 Valve stem	闸板 Wedge gate	密封面 Sealing face	阀杆螺母 Yoke nut	填料 Packing	紧固件 Fastener
NKZ44H NKZ944H-C(type)型	WCB	2Cr13	25	H:合金钢 H:alloy steel	ZQAL 9-4 铝青铜 Al bronze	膨胀复合石墨 Expanding compound graphite	优质碳钢 High-grade carbon steel
NKZ44H NKZ944H-I(type)型	铬钼钢 Cr.Mo. steel	38CrMoA1A	12Cr1Mo1VA	Y:硬质合金 Y:hard alloy	ZQAL 9-4 铝青铜 Al bronze		铬钼钢 Cr.Mo. steel

主要尺寸及重量 Main dimensions and weight

公称压力PN(MPa) Nominal pressure	公称通径DN(in) Nominal diameter	主要外形尺寸及连接尺寸 Main external and connection dimensions (mm)									阀门重量 (Kg)Valve weight	附法兰尺寸（mm） Enclosed flange dimensions			重量(kg) Weight
		L	H	D	D_1	D_2	b	f	z-Φd	W		h	D0	DN	
2.5	50	250	345	160	125	100	20	3	4-18	250	30	48	49	64	2.9
	65	270	395	180	145	120	22	3	8-18	250	43	52	66	82	3.8
	80	280	425	195	160	135	22	3	8-18	300	60	55	78	95	4.8
	100	300	510	230	190	160	24	3	8-23	300	79	62	100	117	7
	125	325	570	270	220	188	28	3	8-25	350	114	68	125	144	10
	150	350	725	300	250	218	30	3	8-25	350	157	72	151	172	13
	200	400	820	360	310	278	34	3	12-25	400	243	60	201	223	19
	250	450	890	425	370	332	36	3	12-30	450	345	85	253	278	23
	300	500	1070	485	430	390	40	4	16-30	550	455	92	303	330	35
	350	550	1320	550	490	448	44	4	16-34	650	615	98	351	382	54
	400	600	1450	610	550	505	48	4	16-34	700	794	115	398	432	68

公称压力PN(MPa) Nominal pressure	公称通径DN(in) Nominal diameter	主要外形尺寸及连接尺寸 Main external and connection dimensions(mm)											阀门重量 (Kg)Valve weight	附法兰尺寸（mm） Enclosed flange dimensions			重量(kg) Weight
		L	H	D	D_1	D_2	b	f	D_6	f_2	z-Φd	W		h	D0	DN	
4.0	50	216	345	160	125	100	20	3	88	4	4-18	300	35	48	48	64	3
	65	241	395	180	145	120	22	3	110	4	8-18	300	49	52	66	82	4
	80	283	425	195	160	135	22	3	121	4	8-18	350	65	58	78	95	5.3
	100	305	510	230	190	160	24	3	150	4.5	8-23	350	87	68	100	117	7.8
	125	381	570	270	220	188	28	3	176	4.5	8-25	400	124	68	125	144	11
	150	403	725	300	250	218	30	3	204	4.5	8-25	400	172	72	151	172	14
	200	419	820	375	320	282	38	3	260	4.5	12-30	450	275	88	199	223	26
	250	457	890	445	385	345	42	3	313	4.5	12-34	550	392	102	251	278	38
	300	502	1070	510	450	408	46	4	364	4.5	16-34	650	515	116	301	330	54
	350	762	1320	570	510	465	52	4	422	5	16-34	750	684	120	349	382	68
	400	838	1450	655	585	535	58	4	474	5	16-41	850	902	142	396	432	108

公称压力PN(MPa) Nominal pressure	公称通径DN(in) Nominal diameter	主要外形尺寸及连接尺寸Main external and connection dimensions (mm)											阀门重量 (Kg)Valve weight	附法兰尺寸（mm） Enclosed flange dimensions			重量(kg) Weight
		L	H	D	D_1	D_2	b	f	D_2	f_2	z-Φd	W		h	D0	DN	
6.4	50	250	350	175	135	105	26	3	88	4	4-23	300	43	70	48	64	4.7
	65	280	405	200	160	130	28	3	110	4	8-23	300	60	75	65	82	6.5
	80	310	435	210	170	140	30	3	121	4	8-23	350	78	75	76	95	7.6
	100	350	515	250	200	168	32	3	150	4.5	8-25	400	100	88	98	117	12
	125	400	580	295	240	202	36	3	176	4.5	8-30	400	140	98	128	150	18
	150	450	735	340	280	240	38	3	204	4.5	8-34	450	204	110	149	172	26
	200	550	835	405	345	300	44	3	260	4.5	12-34	550	317	116	197	223	39
	250	650	905	470	400	352	48	3	313	4.5	12-41	650	475	122	245	278	54
	300	750	1080	530	460	412	54	4	364	4.5	16-41	750	630	136	293	330	72
	350	850	1340	595	525	475	60	4	422	5	16-41	800	850	154	341	382	105
	400	950	1460	670	585	525	66	4	474	5	16-48	900	1096	170	386	432	145

工控阀网 www.cv3000.com

DS系列水封阀
DS SERIES WATER-SEALED VALVES

结构特点及用途 Structure characteristic and application

1.本产品的阀盖填料室具有水密封结构，当接口通入压力为0.6~1MPa的水时，可使系统与大气隔离，保证系统具有良好的气密性。

2.DS/Z型系列采用双闸板双向弹性密封、启闭灵活、迅速、密封可靠。

3.产品结构简单、紧凑合理、检修方便、使用寿命长。

4.在管路上作启闭装置用，必须处于全开或全闭状态，不得用于调节流量。

5.阀门连接方式有法兰和焊接两种，驱动方式为手动和电动。

6.DS系列水封阀门适用于公称压力≤10.0MPa，工作温度≤425℃，工作介质为水、蒸气、油品和低腐蚀气体的管路上作启闭装置用，尤其适用于 火电厂汽机真空冷凝系统。

1.The chamber of packing of the valve bonnet is of a water-sealed structure, which, when the water of 0.6~1.0MPa pressure goes into the mouthpiece, can isolate the system from air to ensure the system with a good leak proofness.

2. Model DS/Z series adopts dual-plate, double direction elastic sealing. It has reliable sealing and can switch neatly and fast.

3. With characteristic of simple, compact and reasonable structure, convenient maintenance and long service life.

4. Being used as a switch device in pipeline, should keep at either full open or full close state, can not be used for flux adjustment.

5. Two connecting ways of flange and welding. And two driving modes of manual and electrical.

6. Ds series of water-sealed valve is suitable for applying as a switch device in pipeline with medium of water, steam, oil goods and low corrosive gas under working temperature of ≤425℃ and nominal pressure ≤10.0MPa, especially suitable for vacuum condensing system in heat-engine plant.

二千控制阀网 www.cv3000.com

主要性能规范：Main property and specification

试验压力 Test Pressure

试验压力(MPa) Test pressure	公称压力PN(MPa) Nominal pressure					
	1.0	1.6	2.5	4.0	6.4	10.0
壳体强度试验 Shell strength test	1.5	2.4	3.8	6.0	9.6	15.0
密封试验 Seal test	1.1	1.8	2.8	4.4	7.0	11.0
上密封试验 Back seal test	1.1	1.8	2.8	4.4	7.0	11.0
气密封试验 Leakproofness test	0.6MPa					

适用范围 Applicable scope

产品类型 Product type	适用温度 suitable temperature	适用介质 suitable medium
碳钢型（C） Carbon steel type	≤425°C	水、蒸汽、油品、非腐蚀性气体 Water, steam, oil goods noncorrosive gas
合金钢（I） Alloy steel	≤540°C	

主要零件材料：Materials for main parts

产品类型 Product type	零件名称 Part name				阀杆螺母 Yoke nut	填料 Packing
	阀体、阀盖、支架 Body、bonnet、yoke	阀杆 Valve stem	闸板、阀瓣、密封面 Wedge gate、disc、sealing face	阀座、密封面 Seat、sealing face		
碳钢型（C） Carbon steel type	WCB 25	1Cr13 or 2Cr13	Cr13型不锈钢或硬质合金 Cr13 type stainless steel or hard alloy	不锈钢 Stainless steel	ZQAL 9-4 铝青铜 Al bronze	柔性石墨 Flexible graphite
合金钢（I） Alloy steel	WC6 Cr5Mo1	38CrMoA1A	钴基合金 Co-based alloy	硬质合金 hard alloy	ZQAL 9-4 铝青铜 Al bronze	柔性石墨 Flexible graphite

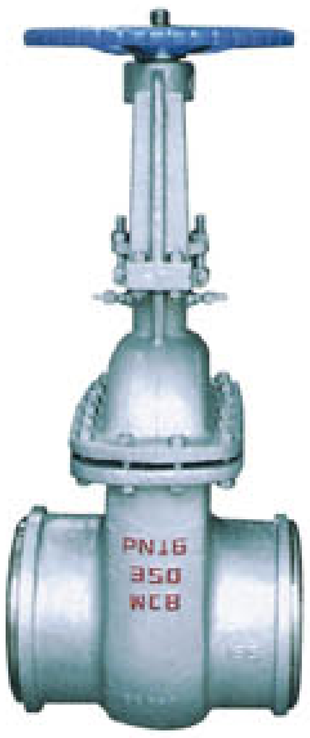

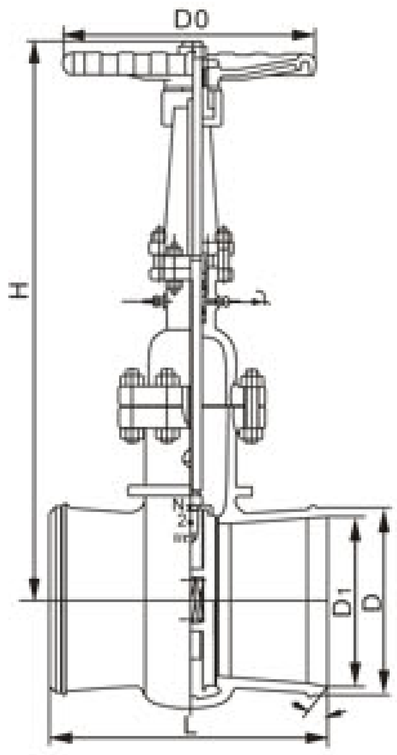

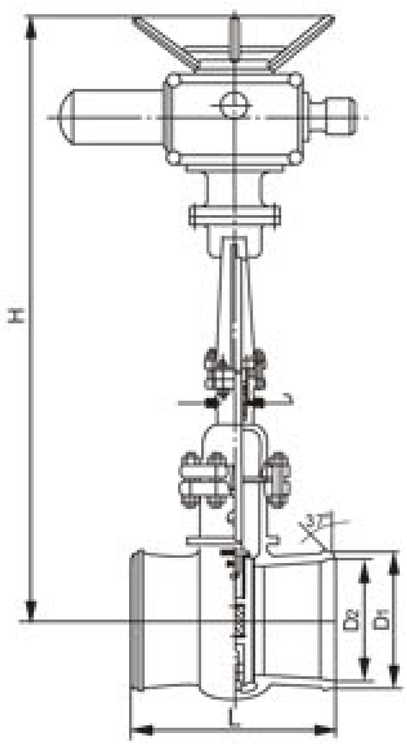

DS/Z64

主要尺寸及重量 Main dimensions and weight

DS/Z64H-16、25 DS/z964Y-16、25

公称通径DN(mm) Nominal diameter	L	H	PN1.6(MPa)				PN2.5(MPa)			
			D_1	D_2	电动装置 Electric actuator	重量kg Weight	D_1	D_2	电动装置 Electric actuator	重量kg Weight
50	250	620	58	50	DZW10	50	64	49	ZB10	54
65	270	714	75	65	DZW10	63	82	67	ZB10	66
80	280	765	91	79	DZW10	65	95	77	ZB10	68
100	300	840	110	97	DZW15	75	117	101	ZB15	80
125	325	852	136	121	DZW15	106	144	126	ZB20	109
150	350	875	163	146	DZW20I	113	172	158	ZB20	146
200	400	1015	223	202	DZW20	189	223	202	ZB25	191
250	450	1125	278	254	DZW30	214	278	254	ZB25	219
300	500	1371	330	305	DZW45	353	330	305	ZC45	357
350	550	1485	382	352	DZW60	602	382	352	ZC60	607
400	600	1890	432	399	DZW60	698	432	399	ZC90	705
450	650	1989	485	451	DZW90	713	485	451	ZC120	720
500	700	2041	535	501	DZW120	881	535	499	ZC120	888
600	800	2285	636	601	DZW180	1250	636	599	ZC180	1275
700	900	2347	726	691	DZW250	1938	726	689	ZC250	1946
800	1000	2593	826	791	DZW350	2562	826	789	ZC350	2574

注：PN1.6(16)阀门允许作为PN1.0(10)压力级选用。 Valve PN1.6(16)is allowed for selection as pressure lely PN1.0(10)

DS/Z64H-40、64、100 DS/Z964H-40I、64I、100I

公称通径 DN(mm) Nominal diameter	L	D	PN4.0(MPa)				PN6.4(MPa)				PN10.0(MPa)			
			D_1	H	电动装置 Electric actuator	重量kg Weight	D_1	H	电动装置 Electric actuator	重量kg Weight	D_1	H	电动装置 Electric actuator	重量kg Weight
50	250	64	49	620	DZW10	56	50	622	DZW10	58	49	622	ZB10	58
65	280	83	67	714	DZW10	68	66	718	DZW15	71	64	718	ZB15	71
80	310	96	79	767	DZW15	73	77	770	DZW20I	74	75	770	ZB20	77
100	350	117	101	845	DZW20I	82	99	845	DZW20I	85	97	845	ZB25	89
125	400	144	126	852	DZW20I	108	129	852	DZW30	111	125	852	ZB25	113
150	450	172	152	875	DZW30	117	150	875	DZW30	117	145	965	ZC45	122
200	550	223	200	1015	DZW30	193	198	1105	DZW45	193	190	1105	ZC60	195
250	650	278	252	1215	DZW45	217	246	1215	DZW60	222	236	1237	ZC90	235
300	750	330	302	1371	DZW60	357	294	1424	DZW90I	362	282	1424	ZC120	370
350	850	382	350	1507	DZW90I	624	342	1507	DZW120I	631	334	1670	ZC180	641
400	950	432	397	1912	DZW120	701	387	2075	DZW180	713	377	2075	ZC250	725

三千控制阀网 www.cv3000.com

水封闸阀
WATER-SEALED GATE VALVES

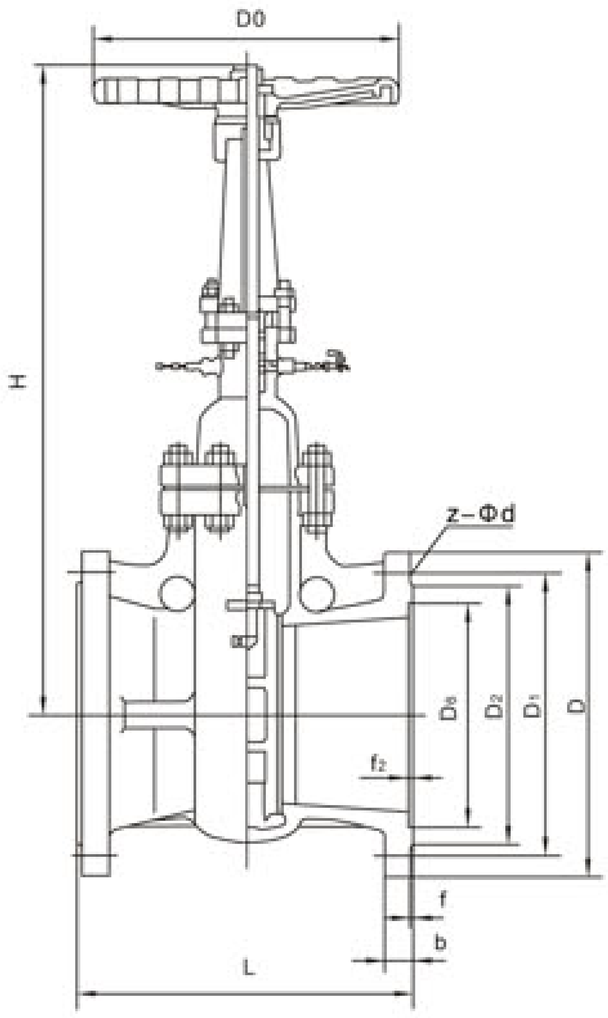

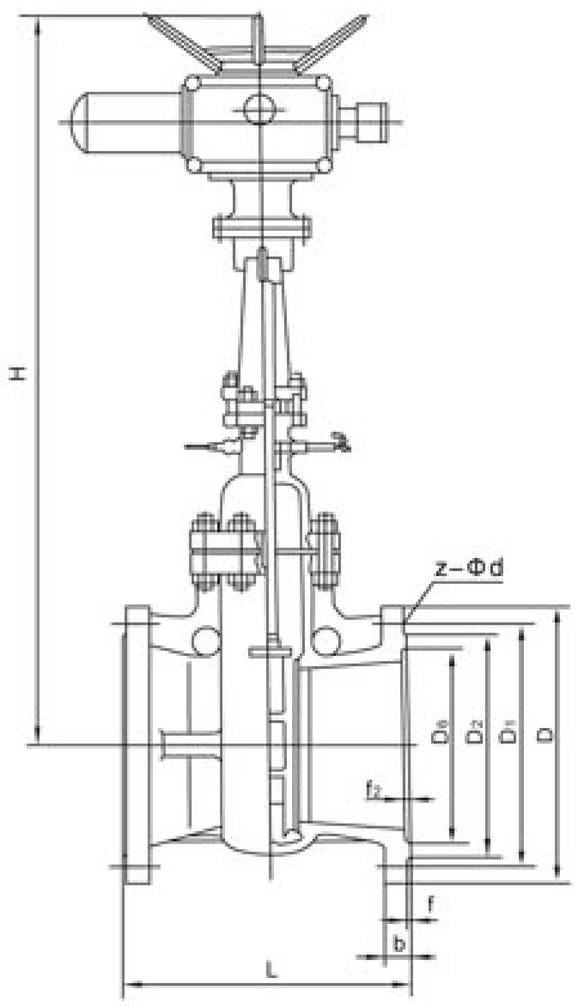

主要尺寸及重量 Main dimensions and weight

公称通径 DN(mm) Nominal diameter	L	D	D_1	D_2	b	f	z-Φd	手动 Manually			电动 Electrically		
								H	D0	重量kg Weight	H	电动装置 Electric actuator	重量kg Weight
DS/Z44H-16C DS/Z44Y-16I DS/Z944H-16C DS/Z944Y-16I													
50	250	160	125	100	16	3	4-18	330	250	23	620	ZB10	51
65	270	180	145	120	18	3	4-18	435	250	35	714	ZB10	62
80	280	195	160	135	20	3	8-18	491	300	37	765	ZB10	65
100	300	215	180	155	20	3	8-18	571	350	49	840	ZB15	77
125	325	245	210	185	22	3	8-18	582	350	81	852	ZB15	109
150	350	280	240	210	24	3	8-23	603	350	103	875	ZB20	130
200	400	335	295	265	26	3	12-23	737	400	162	1015	ZB20	189
250	450	405	355	320	30	3	12-25	860	400	190	1135	ZB25	216
300	500	460	410	375	30	4	12-25	990	450	252	1371	ZC45	355
350	550	520	470	435	34	4	16-25	1131	500	499	1485	ZC60	605
400	600	580	525	485	36	4	16-30	1520	500	600	1890	ZC60	702
450	650	640	585	545	40	4	20-30	1612	600	695	1989	ZC90	819
500	700	705	650	608	44	4	20-34	1660	600	856	2040	ZC120	980
600	800	840	770	718	48	5	20-41	1739	700	1025	2283	ZC180	1255
700	900	910	840	788	50	5	24-41	1745	750	1749	2347	ZC250	1983
800	1000	1020	950	898	52	5	24-41	1899	850	2324	2681	ZC350	2558

三千控制阀网
www.cv3000.com

公称通径 DN(mm) Nominal diameter	L	D	D_1	D_2	b	f	z-Φd	手动 Manually			电动 Electrically		
								H	D0	重量kg Weight	H	电动装置 Electric actuator	重量kg Weight
DS/Z44H-25 DS/Z44Y-25I DS/Z944H-25C DS/Z944Y-25I													
50	250	160	125	100	20	3	4-18	330	250	23	620	ZB10	51
65	270	180	145	120	22	3	8-18	435	250	35	714	ZB10	62
80	280	195	160	135	22	3	8-18	491	300	37	765	ZB10	65
100	300	230	190	160	24	3	8-23	573	350	52	840	ZB15	81
125	325	270	220	188	28	3	8-25	582	350	85	852	ZB20	114
150	350	300	250	218	30	3	8-25	605	350	107	875	ZB20	135
200	400	360	310	278	34	3	12-25	739	400	167	1015	ZB25	193
250	450	425	370	332	36	3	12-30	862	400	196	1135	ZB25	221
300	500	485	430	390	40	4	16-30	990	450	261	1371	ZC45	362
350	550	550	490	448	44	4	16-34	1139	500	506	1485	ZC60	613
400	600	610	550	505	48	4	16-34	1523	500	618	1912	ZC90	828
450	650	660	600	555	50	4	20-34	1612	600	703	1989	ZC120	843
500	700	730	660	610	52	4	20-41	1662	600	864	2040	ZC120	1011
600	800	840	770	718	56	5	20-41	1742	700	1756	2283	ZC180	1263
700	900	955	875	815	60	5	24-48	1745	750	1754	2347	ZC250	1998
800	1000	1070	990	930	64	5	24-48	1901	850	2335	2681	ZC350	2567

三千控制阀网 www.cv3000.com

主要尺寸及重量 Main dimensions and weight

DS/Z44H-40 DS/Z44Y-40I DS/Z944H-40 DS/Z944HY-40I

公称通径 DN(mm) Nominal diameter	L	D	D_1	D_2	D_6	f	b	f_2	z-Φd	手动 Manually			电动 Electrically		
										H	D0	重量kg Weight	H	电动装置 Electric actuator	重量 Weight
DS/Z44H-40 DS/Z44Y-40I DS/Z944H-40C DS/Z944Y-40I															
50	216	160	125	100	88	3	20	4	4-18	330	300	27	620	ZB10	55
65	241	180	145	120	110	3	22	4	8-18	435	300	38	714	ZB10	65
80	283	195	160	135	121	3	22	4	8-18	491	350	42	765	ZB15	70
100	305	230	190	160	150	3	24	4.5	8-23	573	350	57	840	ZB20	86
125	381	270	220	188	176	3	28	4.5	8-25	582	400	91	852	ZB20	120
150	403	300	250	218	204	3	30	4.5	8-25	605	400	110	875	ZB25	138
200	419	375	320	282	260	3	38	4.5	12-30	739	450	169	1015	ZB40	200
250	457	445	385	345	313	3	42	4.5	12-34	862	550	207	1225	ZB40	298
300	502	510	450	408	364	4	46	4.5	16-34	990	650	266	1371	ZC60	383
350	762	570	510	465	422	4	52	5	16-34	1139	750	513	1507	ZC90	601
400	838	655	585	535	474	4	58	5	16-41	1523	850	627	1912	ZC120	866

主要外型尺寸及连接尺寸 Main dinensions and weight

公称通径 DN(mm) Nominal diameter	L	D	D_1	D_2	D_6	f	b	f_2	z-Φd	手动 Manually			电动 Electrically		
										H	D0	重量kg Weight	H	电动装置 Electric actuator	重量kg Weight
DS/Z44H-64 DS/Z44Y-64I DS/Z944H-64 DS/Z944Y-64I															
50	250	175	135	105	88	3	26	4	4-23	337	300	30	622	ZB10	58
65	280	200	160	130	110	3	28	4	8-23	441	300	41	714	ZB15	69
80	310	210	170	140	121	3	30	4	8-23	496	350	45	765	ZB20	73
100	350	250	200	168	150	3	32	4.5	8-25	578	400	62	840	ZB25	90
125	400	295	240	202	176	3	36	4.5	8-30	588	400	97	852	ZB40	124
150	450	340	280	240	204	3	38	4.5	8-34	610	450	115	875	ZB40	142
200	550	405	345	300	260	3	44	4.5	12-34	744	550	172	1195	ZC45	276
250	650	470	400	352	313	3	48	4.5	12-41	867	650	211	1225	ZC60	317
300	750	530	460	412	364	4	54	4.5	16-41	996	750	271	1393	ZC90	399
350	850	595	525	475	422	4	60	5	16-41	1142	850	518	1507	ZC120	647
400	950	670	585	525	474	4	66	5	16-48	1537	900	633	2075	ZC180	882
DS/Z44H-100 DS/Z44Y-100I DS/Z944H-100 DS/Z944Y-100I															
50	250	195	145	112	88	3	28	4	4-25	337	300	34	622	ZB10	62
65	280	220	170	138	110	3	32	4	8-25	441	300	46	714	ZB15	74
80	310	230	180	148	121	3	34	4	8-25	496	350	50	765	ZB20	78
100	350	265	210	172	150	3	38	4.5	8-30	578	400	67	840	ZB40	95
125	400	310	250	210	176	3	42	4.5	8-34	588	400	102	852	ZB40	129
150	450	350	290	250	204	3	46	4.5	12-34	610	450	121	875	ZC45+	221
200	550	430	360	312	260	3	54	4.5	12-41	744	550	178	1195	ZC60	285
250	650	500	430	382	313	3	60	4.5	12-41	867	650	217	1225	ZC90	345
300	750	585	500	442	364	4	70	4.5	16-48	996	750	278	1393	ZC120	409
350	850	655	560	498	422	4	76	5	16-54	1142	850	524	1507	ZC180	773
400	950	715	620	558	474	4	80	5	16-54	1537	950	640	2075	ZC250	892

三千控制阀网
www.cv3000.com

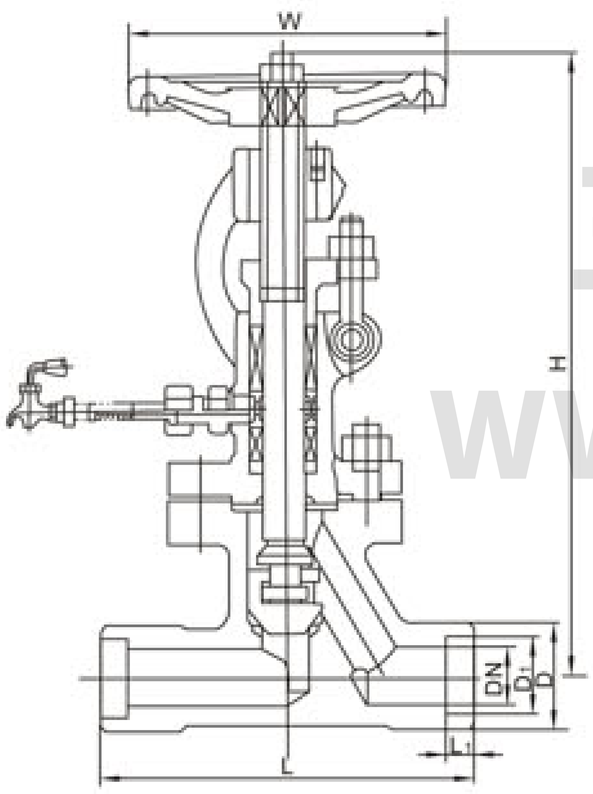

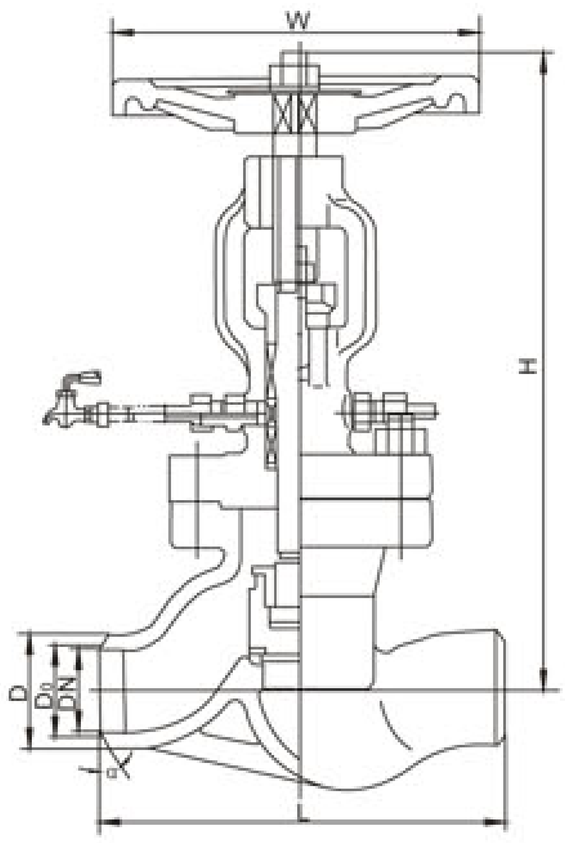

主要尺寸及重量 Main dimensions and weight

公称通径 DN(mm) Nominal diameter	主要外形尺寸及连接尺寸 Main external and connecting dimensions(mm)								重量(kg) Weight
	L	D	D_1	D0	a	L_1	H	W	
DS/J61H-25 DS/J61Y-25I									
10	130	36	15	10	–	10	255	120	4.8
15	130	36	19	15	–	11	257	120	5.0
20	150	44	26	20	–	11	267	140	7.3
25	160	44	33	24	–	12	269	140	8.2
32	180	48	34	32	37° 30′	–	255	180	12
40	200	55	40	38	37° 30′	–	295	200	15
50	230	64	50	46	37° 30′	–	354	250	25
65	290	82	65	62	37° 30′	–	400	250	38.5
80	310	94	78	74	37° 30′	–	425	300	49
100	350	117	97	95	37° 30′	–	468	350	64
125	400	144	122	120	37° 30′	–	475	400	83
150	480	170	148	145	37° 30′	–	611	400	94
200	600	220	197	193	37° 30′	–	721	400	152
DS/J61H-40 DS/J61Y-40I									
10	130	38	15	10	37° 30′	–	255	120	5.3
15	130	38	19	15	37° 30′	–	257	120	5.7
20	150	47	26	20	37° 30′	–	267	140	7.6
25	160	47	33	24	37° 30′	–	270	160	8.8
32	180	53	34	32	37° 30′	–	257	160	13.2
40	200	57	40	38	37° 30′	–	297	200	16.5
50	230	68	50	46	37° 30′	–	354	250	26
65	290	85	65	62	37° 30′	–	405	280	41.3
80	310	98	78	74	37° 30′	–	427	320	51.5
100	350	122	97	95	37° 30′	–	470	350	69
125	400	148	122	120	37° 30′	–	475	400	89
150	480	176	148	145	37° 30′	–	614	400	98
DS/J61H-64 DS/J61Y-64I									
10	130	38	15	10	37° 30′	–	255	140	6
15	210	38	19	15	37° 30′	–	257	140	6.4
20	230	47	26	19	37° 30′	–	269	160	8.4
25	230	47	33	24	37° 30′	–	273	180	9.6
32	260	53	34	32	37° 30′	–	259	200	23
40	260	57	40	38	37° 30′	–	297	250	34
50	300	70	50	46	37° 30′	–	356	280	46
65	340	86	65	62	37° 30′	–	405	320	67
80	380	100	78	74	37° 30′	–	429	360	85
100	430	124	97	95	37° 30′	–	477	400	97

三千控制阀网 www.cv3000.com

上海明珠阀门制造有限公司
SHANGHAI MINGZHU VALVE MFG.CO.,LTD.

厂址：上海市奉贤区金汇镇工业大道1111号
ADD:No.1111 Industry Road Jinhui Town, Fengxian County. Shanghai, China
电话(TEL)：021-57482386　57483788
传真(FAX)：021-57482872
邮编(P.C)：201404
网络实名：上海明珠阀门
http://www.mingzhu-valve.com
E-mail:mzfm6688@163.com

工控制阀网
www.cv3000.com

中国进出口商品检验总公司质量认证中心　中石化物资资源市场成员　中石油一级供应网络成员　国家电力　合同信用等级认证　中国人民保险产品责任保险　中国阀门协会成员

以上产品资料仅供参考，如有参数改动本公司恕不另行通知并不承担法律责任。