关于我们
About us

浙江指南针阀门有限公司，坐落于温州瓯北——中国泵阀之乡。公司主要生产火电系统阀门，主要服务于国电，华电，华能，大唐，中电投等五大电力公司，我公司经过多年的现场售后服务与技术支持，研究和发展，立志为用户提供更放心，更耐用的阀门产品。

我公司已通过ISO9001质量管理体系认证， ISO14001 环境管理体系认证，ISO18001 职业健康安全管理认证，为阀门产品质量保驾护航。指南针阀门通过6S管理，产品加工流程工序卡，装配工序卡，检验责任制，以确保产品质量和产品可追溯。公司立足于自主创新，质量赢口碑，服务赢市场。

Zhejiang Zhinanzhen Valve Co., Ltd. is located in Oubei, Wenzhou, the hometown of pumps and valves in China. The company mainly produces thermal power system valves, mainly serving five major power companies, including Guodian, Huadian, Huaneng, Datang and CITIC. After years of on-site after-sales service and technical support, research and development, our company is determined to provide users with more reliable and durable valve products.

Our company has passed ISO 9001 quality management system certification, ISO 14001 environmental management system certification, ISO 18001 occupational health and safety management certification, escorting the quality of valve products. Compass valve through 6S management, product processing process card, assembly process card, inspection responsibility system to ensure product quality and product traceability. The company is based on independent innovation, quality win reputation, service win market.

企业资质
Enterprise qualification

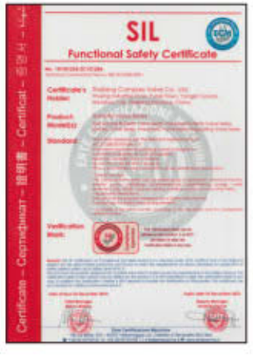

生产设备
Production equipment

采用精良的生产装备、崭新的工业概念及强大的技术力量，生产出符合国际标准的高品质终端产品，从而加快了企业的产业化速度。无论是产品原材料的选择还是产品的出厂检验，一丝不苟地按照国际标准严格把关，使出厂产品合格率保持在100%，真正确保产品的卓越品质。

Using sophisticated production equipment, a new industrial concept and a strong technical force, the production of high quality products in line with international standards, so as to speed up the pace of the industrialization of the enterprise. Both products are raw materials selection and product factory inspection, meticulously according to international standard strictly, make product factory qualified rate remained at 100%, truly ensure that the products of excellent quality.

装配
Assembling

标准化装配车间按照不同工位分为多条装配线，确保产品在整个装配流程中不被损伤，流水线作业保证了安装工作中诸多程序一气呵成，确保作业有条不紊，提高工作效率与保证了产品质量。

The standardized assembly workshop is divided into several assembly lines according to different workstations to ensure that the product is not damaged in the whole assembly process. The assembly line operation ensures that many procedures are completed in one go, that the operation is orderly, that the work efficiency is improved and that the product quality is guaranteed.

质量检测
Quality testing

为确保产品出厂后的质量，在装配后所有产品都经过多道程序进行相关性能的检测调试，保证产品合格率达到100%。

In order to ensure the quality of products after they leave the factory, after assembly, all products are tested and debugged through multi-channel procedures to ensure that the qualified rate of products reaches 100%.

EPDM Butterfly valve

EPDM®

目录 Catalog

技术参数

Technical parameter

1	产品分类 Product classification	名称 Name	蝶阀 Butterfly valve					
		代号 Code	B					
2	连接方式 Connection mode	名称 Name	对夹 Pair clip	凸耳 Lug	法兰 Flange	U法兰 Flange		
		代号 Code	W	L	F	U		
3	驱动方式 Driving mode	名称 Name	光杆 Polished rod	手柄 Handle	蜗轮 Worm gear	电动 Electric	气动 Pneumatic	液动 Hydraulic motion
		代号 Code	B	H	W	E	P	L
4	公称压力 Nominal pressure	名称 Name	PN6	PN10	PN16	150LB	10K	
		代号 Code	6	10	16	150	10K	
5	公称通径 Nominal diameter	名称 Name	50	100	200	…	1000	1500
		代号 Code	50	100	200	…	1K0	1K5
6	阀体/蝶板 Valve body/butterfly plate	名称 Name	球墨铸铁 Ductile iron	铸钢 Cast steel	304	304L	316	316L
		代号 Code	Q	C	P	PL	R	RL
7		名称 Name	2507	1.4529	铝青铜 Aluminum bronze	EPDM		
		代号 Code	5A	X1	T	E		
8	阀杆 Stem	名称 Name	2Cr13	304	316	2507	K400	K500
		代号 Code	2	P	R	5A	K4	K5
9	阀座 Valve seat	名称 Name	EPDM	EPDMS	NBR	VITON	PTFE	PTFEM
		代号 Code	M	MS	N	V	P	PM

● 非常适用 Very suit ● 适用 Suitbale ● 有限适用 Limited suit ● 不适用 Not suit

密封材料 Sealing material		适用温度 Applicable temperature	介质类型及适用程度 Medium Type and Applicability: 淡水 Freshwater	海水 Seawater	盐类 Salt	强碱 Strong base	弱碱 Weak alkali	强酸 Strong acid	弱酸 Weak acid	天然气 Natural gas	醇类 Alcohols	空气 Atmosphere	蒸汽 Steam	油类 Oils	食品 Food	突出特点 Characteristic	价格 Price
阀座 Valve seat	丁腈NBR	-10~93℃														耐油 Oil resistance	低 low
	三元乙丙EPDM	-50~135℃														耐老化 Aging resistance	较低 Lower
	天然橡胶NR	-20~80℃														耐弹性 Resilience	低 low
	氯丁橡胶CR	-40~82℃														耐光、耐老化 Light and Aging Resistance	低 low
	硅橡胶SI	-65~220℃														耐高温 High temperature resistance	高 high
	氟橡胶FPM	-23~200℃														耐高温、耐腐蚀 High temperature and corrosion resistance	昂贵 expensive
	聚四氟乙烯PTFE	-210~180℃														耐强腐蚀、耐热 Strong corrosion resistance and heat resistance	昂贵 expensive
蝶板 Disc	球铁电镀	-30~350℃														耐热 Heat-resisting	低 low
	球铁尼龙覆层	-30~95℃				●										抗蚀、耐磨、减摩 Corrosion Resistance, Wear Resistance and Friction Reduction	较低 Lower
	球铁氮化聚醚覆层	-30~130℃														耐强腐蚀、耐磨 Strong corrosion resistance and wear resistance	较低 Lower
	球铁四氟覆层	-30~160℃														耐强腐蚀、耐热 Strong corrosion resistance and heat resistance	昂贵 expensive
	铝青铜	-273~232℃		▲												耐热，耐腐蚀 Heat and corrosion resistance	高 high
	不锈钢	-268~538℃		▲												耐高温，耐腐蚀 High temperature and corrosion resistance	高 high
	碳钢电镀	-29~425℃														耐高温 High temperature resistance	较低 Lower
	双相不锈钢2507	-268~538℃														耐高温，耐腐蚀 High temperature and corrosion resistance	昂贵 expensive
	脱硫脱硝合金钢 1.4529	-268~538℃														耐高温，耐腐蚀 High temperature and corrosion resistance	昂贵 expensive

1. 本表仅供参考，客户订货时请详告介质、名称、浓度、温度、压力，我们将根据您的需要快速选择。This sheet is for reference,customer must tell names,thickness,temperature,pressure in order So that we can give you the best advice.
2. 表中▲流速大于1.5M/S不适用Sheet。 Current velocity over 1.5M/S not suit 氢氧化钾不适用 ● Potassium hydroxide not suit

各类参考数据

Various reference data

通径 DN	扭矩 N.M		重量（KG）			手柄重量(KG) Handel	蜗轮型号	蜗轮重量(KG)		气动执行器 Pneumatic		电动执行器 Electric	
mm	PN10	PN16	A型 Wafer	LT Wafer	法兰式 Flange	铝手柄 Aluminum	Gear Type	铁蜗轮 leon	铝蜗轮 Aluminum	型号 Type	重量 KG	型号 Type	重量 KG
40	10	11	2.6	/	/	1.05	ZNZ-A24	4.2	1.2	AT 52	1.5	TOP-105	2.5
50	11	12	2.6	3.6	4.5	1.05	ZNZ-A24	4.2	1.2	AT 52	1.5	TOP-105	2.5
65	18	20	3.4	4.8	7.3	1.05	ZNZ-A24	4.2	1.2	AT 63	1.5	TOP-105	2.5
80	25	30	4	5.3	9	1.05	ZNZ-A24	4.2	1.2	AT 75	1.5	TOP-105	2.5
100	43	53	4.5	8	11.2	1.17	ZNZ-A24	4.2	1.2	AT 83	206	TOP-110	4.3
125	67	77	7	9.5	15.5	1.3	ZNZ-A24	4.2	1.8	AT 92	6.0	TOP-116	5.5
150	110	121	8	12.5	18.5	1.3	ZNZ-A24	4.2	1.8	AT 105	6.0	TOP-120	7.4
200	207	215	14	19	27	/	ZNZ-A30	10.8	4.6	AT 125	9.2	TOP-140	7.4
250	318	330	21.2	29	44	/	ZNZ-A30	10.8	4.6	AT 140	12.1	TOP-140	7.4
300	491	490	30.5	50	55	/	ZNZ-A50	14.2	7	AT 160	16.7	TOP-160	8
350	733	780	44	65	80	/	ZNZ-A50	14.2	/	AT 190	27.1	TOP-1100	12
400	1020	1270	62	102	95	/	ZNZ-B13	25	/	AT 210	32.2	TOP-1200	12
450	1350	1500	95	115	130	/	ZNZ-B13	25	/	AT 210	32.2	Z 20	55
500	1780	1960	230	145	159	/	ZNZ-B13	25	/	AT 240	45.5	Z 30	58
600	2300	2500	270	240	220	/	ZNZ-B13	25	/	AT 270	69.3	Z 45	115
700	4700	4920	280	/	330	/	ZNZ-B26	76	/	AW 25	49	Z 60	123
800	7000	7840	370	/	528	/	ZNZ-B26	76	/	AW 28	73	Z 90	140
900	9000	9760	710	/	595	/	ZNZ-B50	88	/	AW 35	148	Z 90	140
1000	12000	13600	860	/	680	/	ZNZ-B50	88	/	AW 35	148	Z 120	145

注：配执行器时，扭矩加20%的安全系数 When equipped with acyuators,Torque increase 20% safety coefficient

EPDM®

对夹软靠背手柄蝶阀-BWH系列

Butterfly Valve with Soft Backrest Handle-BWH Series

BWH1050QE2MS

BWH1665QQ2MS

BWH15080QQ2MS

BWH10K125QQ2MS

EPDM®

对夹软靠背蜗轮蝶阀-BWW系列

Butterfly Valve with Soft Backrest Worm Gear-BWW Series

BWW1080QE2MS

BWW15080QQ2MS

BWW16150QE2MS

BWW10K200QQ2MS

EPDM®

对夹软靠背电/气动蝶阀-BWE/P系列

Electric/Pneumatic Butterfly Valve with Soft Back-to-Back Clamp-BWE/P Series

BWE1050QE2MS

BWE150125QQ2MS

BWP1065QQ2MS

BWP16125QQ2MS

EPDM®

分体式软靠背蝶阀-BWPM系列

Split Soft Back Butterfly Valve-BWPM Series

BWH10100QRL2PM

BWW10150QPE2PM

BWE10100QPE2PM

BWP10150QPE2PM

对夹软靠背蝶阀结构及连接尺寸

Structure and Connection Dimension of Butterfly Valve with Soft Backrest

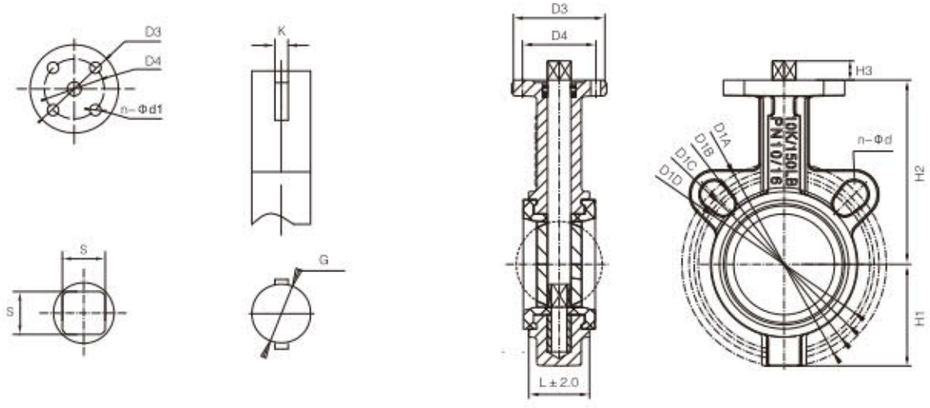

PN10&PN16&150LB&10K

NPS	DN	L	150LB	PN16	PN10	10 K	150 LB	PN16	PN10	10 K	H1	H2	H3	S*S/G	K	D3	D4	n-Φd1
			D1A	D1B	D1C	D1D	n-Φd	n-Φd	n-Φd	n-Φd								
1.1/2	40	42	98.4	110	110	105	4-19	4-18	4-18	4-16	67	133	14	9*9/12.6	3	65/90	50/70	4-7/10
2	50	42	120.7	125	125	120	4-19	4-18	4-18	4-16	67	133	14	9*9/12.6	3	65/90	50/70	4-7/10
2.1/2	65	45	139.7	145	145	140	4-19	8-18	8-18	4-16	75	137	14	9*9/12.6	3	65/90	50/70	4-7/10
3	80	45	152.4	160	160	150	4-19	8-18	8-18	8-16	82	159	14	9*9/12.6	3	65/90	50/70	4-7/10
4	100	52	190.5	180	180	175	8-19	8-18	8-18	8-16	105	171	18	11*11/15.7	5	90	70	4-10
5	125	54	215.9	210	210	210	8-22	8-18	8-18	8-20	118	189	22	14*14/18.9	5	90	70	4-10
6	150	54	241.3	240	240	240	8-22	8-22	8-22	8-20	135	209	22	14*14/18.9	5	90	70	4-10
8	200	59	298.5	295	295	290	8-22	12-22	8-22	12-20	165	258	24	17*17/22	5	125	102	4-12
10	250	66	362	355	350	355	12-26	12-26	12-22	12-22	200	299	30	22*22/28.4	8	125	102	4-12
12	300	77	413.8	410	400	400	12-26	12-26	12-22	16-22	230	337	30	22*22/31.6	8	150	125	4-14
14	350	77	476.3	470	460	445	12-29	16-26	16-22	16-22	274	350	45	22*22/31.6	8	150	125	4-14
16	400	86/102	539.8	525	515	510	12-29	16-30	16-26	16-24	304	405	50	27*27/33.2	10	175	140	4-18
18	450	105/114	577.9	585	565	565	16-32	20-30	20-26	20-24	335	409	50	27*27/38	10	175	140	4-22
20	500	130	635	650	620	620	20-32	20-33	20-26	20-24	368	460	60	36*36/41.1	10	210	165	4-22
24	600	151	749.3	770	725	730	20-33	20-36	20-30	24-30	428	516	70	36*36/50.6	16	210	165	4-22
28	700	163	863.6	840	840	840	28-35	24-36	24-30	24-30	520	648	80	46*46/62	18	300	254	8-18
32	800	190	977.9	950	950	850	28-39	24-39	24-33	28-30	580	668	80	46*46/62	18	300	254	8-18
36	900	203	1085.8	1050	1050	1050	32-39	28-39	28-33	28-30	656	720	118	55*55/75	20	300	254	8-18
40	1000	216	1200.2	1170	1160	1160	36-39	28-42	28-36	28-36	722	800	148	55*55/85	22	300	254	8-18

对夹软靠背蝶阀结构及连接尺寸

Structure and Connection Dimension of Butterfly Valve with Soft Backrest

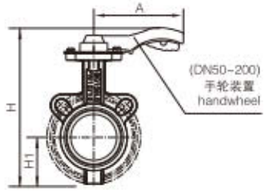

DN	40	50	65	80	100	125	150	200
H1	67	67	75	82	105	118	135	165
H	177	265	287	302	350	372	398	420
A	115	170	170	170	215	215	215	355

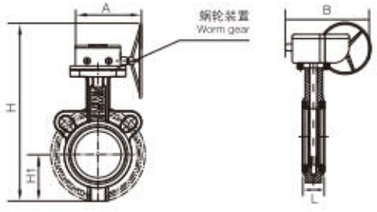

DN	40	50	65	80	100	125	150	200	250	300	350	400	450	500	600	700	800	900	1000
H1	67	67	75	82	105	118	135	165	200	230	274	304	335	368	428	520	580	656	722
H	260	308	330	345	383	405	431	584	651	712	804	920	983	1048	1199	1470	1603	1741	1887
A	208	208	208	208	208	208	208	299	299	294	294	361	361	361	417	485	485	534	534
B	174	174	174	174	174	174	174	292	292	308	308	426	426	426	479	578	578	650	650
L	42	42	45	45	52	54	54	59	66	77	77	86	105	130	151	163	190	203	216

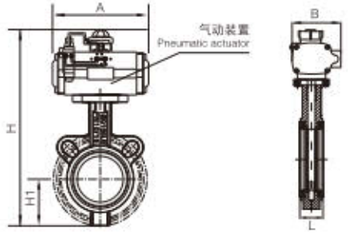

DN	40	50	65	80	100	125	150	200	250	300	350	400	450	500	600	700	800	900	1000
H1	67	67	75	82	105	118	135	165	200	230	274	304	335	368	428	520	580	656	722
H	241	289	325	360	398	452	478	570	657	746	867	935	1013	1230	1429	1668	1847	1976	2122
A	130	130	140	140	186	254	254	296	384	384	501	533	589	589	638	1330	1380	1860	1860
B	59	59	70	70	91	120	120	137	173	173	208	224	274	274	322	320	360	440	440
L	42	42	45	45	52	54	54	59	66	77	77	86	105	130	151	163	190	203	216

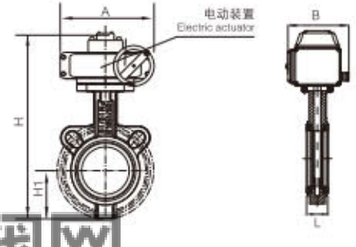

DN	40	50	65	80	100	125	150	200	250	300	350	400	450	500	600	700	800	900	1000
H1	67	67	75	82	105	118	135	165	200	230	274	304	335	368	428	520	580	656	722
H	284	332	354	400	438	501	521	593	660	747	839	879	1288	1353	1504	1775	1908	2104	2250
A	165	165	212	212	212	259	259	259	259	259	284	284	644	644	644	803	803	887	1015
B	140	140	154	154	154	186	186	186	186	186	193	193	495	495	495	671	671	693	693
L	42	42	45	45	52	54	54	59	66	77	77	86	105	130	151	163	190	203	216

EPDM®

对夹硬靠背手柄蝶阀-BWHM系列

Butterfly Valves with Hard Backrest Handles - BWHM Series

BWH15065QP2M

BWH1680QP2M

BWH1080P2P

BWH10100P2P

对夹硬靠背蜗轮蝶阀-BWWM系列

Butterfly Valves with Hard Back-to-Back Worm Gears-BWWM Series

BWW1665QP2M

BWW16100QP2M

BWW10100P2P

BWW10200P2P

对夹硬靠背电/气动蝶阀-BWE/PM系列

Electric/Pneumatic Butterfly Valves with Hard Back-to-Back Clamp-BWE/PM Series

BWE10100QRL2P

BWE10100QRL2P

BWP10100QRL2P

BWP10200QRL2P

EPDM®

对夹凸耳蝶阀-BLP系列

Butterfly Valve with Butterfly Clamp Ear-BLP Series

BLH1680QP2P

BLW1680QP2P

BLP1680QP2P

BLE1680QP2P

EPDM®

不锈钢硬靠背蝶阀-BWPP系列

Stainless Steel Hard Backrest Butterfly Valve-BWPP Series

BWH150100PP2M

BWW150100PP2M

BWP16100PP2M

BWE16100PP2M

对夹硬靠背蝶阀结构及连接尺寸

Structure and Connection Dimension of Butterfly Valve with Hard Backrest

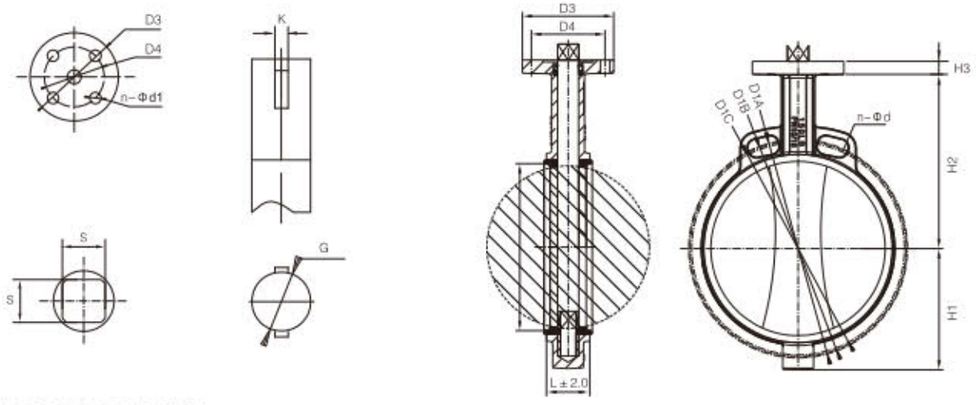

PN10&PN16&150LB

NPS	DN	L	150LB D1A	PN16 D1B	PN10 D1C	150LB n-Φd	PN16 n-Φd	PN10 n-Φd	H1	H2	H3	SxS/G	K	D3	D4	n-Φd1
1.1/2	40	42	98.4	110	110	4-19	4-18	4-18	67	133	14	9*9/12.6	3	65	50	4-7
2	50	42	120.7	125	125	4-19	4-18	4-18	67	133	14	9*9/12.6	3	65	50	4-7
2.1/2	65	45	139.7	145	145	4-19	8-18	8-18	75	137	14	9*9/12.6	3	65	50	4-7
3	80	45	152.4	160	160	4-19	8-18	8-18	82	159	14	9*9/12.6	3	65	50	4-7
4	100	52	190.5	180	180	8-19	8-18	8-18	105	171	18	11*11/15.7	5	90	70	4-10
5	125	54	215.9	210	210	8-22	8-18	8-18	118	189	22	14*14/18.9	5	90	70	4-10
6	150	54	241.3	240	240	8-22	8-22	8-22	135	209	22	14*14/18.9	5	90	70	4-10
8	200	59	298.5	295	295	8-22	12-22	8-22	165	258	24	17*17/22	5	125	102	4-12
10	250	66	362	355	350	12-26	12-26	12-22	200	299	30	22*22/28.4	8	125	102	4-12
12	300	77	413.8	410	400	12-26	12-26	12-22	230	337	30	22*22/31.6	8	150	125	4-14
14	350	77	476.3	470	460	12-29	16-26	16-22	274	350	45	22*22/31.6	8	150	125	4-14
16	400	86/102	539.8	525	515	12-29	16-30	16-26	304	405	50	27*27/33.2	10	175	140	4-18
18	450	105/114	577.9	585	565	16-32	20-30	20-26	335	409	50	27*27/38	10	175	140	4-22
20	500	130	635	650	620	20-32	20-33	20-26	368	460	60	36*36/41.1	10	210	165	4-22
24	600	151	749.3	770	725	20-33	20-36	20-30	428	516	70	36*36/50.6	16	210	165	4-22
28	700	163	863.6	840	840	28-35	24-36	24-30	520	648	80	46*46/62	18	300	254	8-18
32	800	190	977.9	950	950	28-39	24-39	24-33	580	668	80	46*46/62	18	300	254	8-18
36	900	203	1085.8	1050	1050	32-39	28-39	28-33	656	720	118	55*55/75	20	300	254	8-18
40	1000	216	1200.2	1170	1160	36-39	28-42	28-36	722	800	148	55*55/85	22	300	254	8-18

EPDM®

对夹硬靠背蝶阀结构及连接尺寸

Structure and Connection Dimension of Butterfly Valve with Hard Backrest

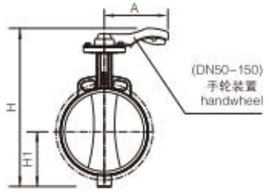

DN	40	50	65	50	80	100	125	150
H1	67	67	75	82	105	118	135	165
H	263	263	282	265	302	360	382	410
A	170	170	170	170	170	215	215	215

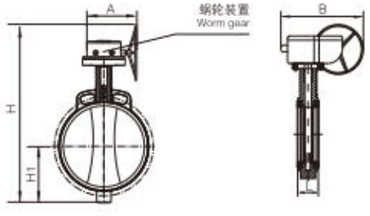

DN	40	50	65	80	100	125	150	200	250	300	350	400	450	500	600	700	800	900	1000
H1	67	67	75	82	105	118	135	165	200	230	274	304	335	368	428	520	580	656	722
H	306	306	325	345	393	415	443	613	676	747	829	859	1020	1120	1301	1470	1603	1741	1887
A	208	208	208	208	208	208	208	299	299	294	294	361	361	361	417	485	485	534	534
B	174	174	174	174	174	174	174	292	292	308	308	426	426	426	479	578	578	650	650
L	42	42	45	45	52	54	54	59	66	77	77	86	105	130	151	163	190	203	216

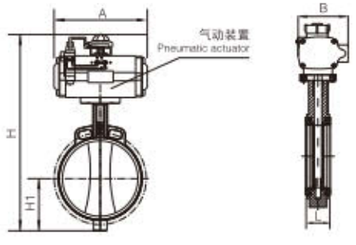

DN	40	50	65	80	100	125	150	200	250	300	350	400	450	500	600	700	800	900	1000
H1	67	67	75	82	105	118	135	165	200	230	274	304	335	368	428	520	580	656	722
H	287	287	320	360	408	462	490	599	682	781	892	994	1050	1302	1531	1668	1847	1976	2122
A	130	130	140	140	186	254	254	296	384	384	501	533	589	589	638	1330	1380	1860	1860
B	59	59	70	70	91	120	120	137	173	173	208	224	274	274	322	320	360	440	440
L	42	42	45	45	52	54	54	59	66	77	77	86	105	130	151	163	190	203	216

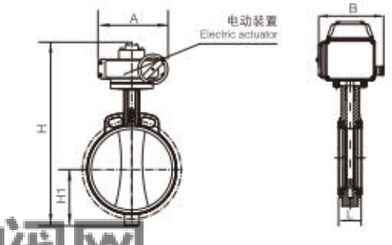

DN	40	50	65	80	100	125	150	200	250	300	350	400	450	500	600	700	800	900	1000
H1	67	67	75	82	105	118	135	165	200	230	274	304	335	368	428	520	580	656	722
H	330	330	349	400	448	511	539	628	691	782	864	938	1325	1425	1606	1775	1908	2104	2250
A	165	165	212	212	212	259	259	259	259	259	284	284	644	644	644	803	803	887	1015
B	140	140	154	154	154	186	186	186	186	186	193	193	495	495	495	671	671	693	693
L	42	42	45	45	52	55	55	60	66	76	76	86	105	130	151	163	188	203	216

EPDM®

法兰软靠背蝶阀-BFMS系列

Flange Soft Back Butterfly Valve-BFMS Series

BFH10100Q5A2MS

BFW10100Q5A2MS

BFP16100QX12MS

BFE16100QX12MS

法兰硫化蝶阀-BFM系列

Flange vulcanized butterfly valve-BFM series

BFH16125QP2M

BFW16125QP2M

BFP16125QT2M

BFE16125QT2M

EPDM®

法兰硫化蝶阀-BFM系列

Flange vulcanized butterfly valve-BFM series

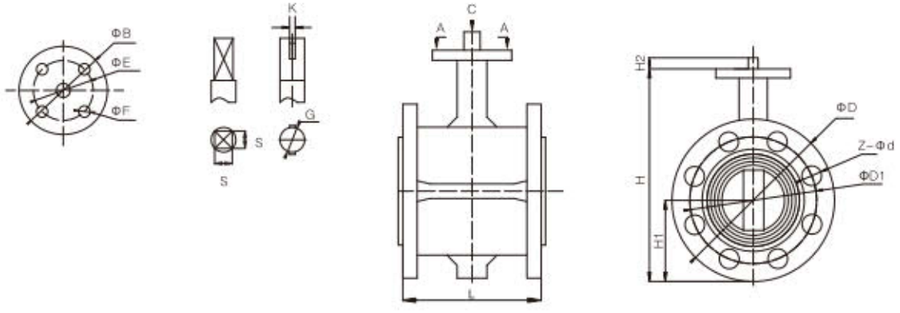

外形及连接尺寸 Shape and Connection Size

单位Unit：mm

公称通径 DN	L	D1	D	Z-Φd	H	H1	S*S/G	K	B	E	4-ΦF	H2	扭矩 N.m
		0.6/1.0/1.6	0.6/1.0/1.6	0.6/1.0/1.6						#			
50	108	110/125/125	140/165/165	4-14/4-18/4-18	200	80	9*9/12.6	1-3	65	50	4-7.5	27	22
65	112	130/145/145	160/185/185	4-14/4-18/4-18	219	89	9*9/12.6	1-3	65	50	4-7.5	27	28
80	114	150/160/160	190/200/200	4-18/8-18/8-18	240	95	9*9/12.6	1-3	65	50	4-7.5	27	44
100	127	170/180/180	210/220/220	4-18/8-18/8-18	270	114	11*11/15.7	1-5	90	70	4-10	27	69
125	140	200/210/210	240/250/250	8-18/8-18/8-18	295	125	14*14/18.9	1-5	90	70	4-10	27	114
150	140	225/240/240	265/285/285	8-18/8-22/8-22	330	142	14*14/18.9	1-5	90	70	4-10	27	155
200	152	280/295/295	320/340/340	8-18/8-22/12-22	375	170	17*17/22	1-5	125	102	4-12	45	282
250	165	335/350/355	375/395/405	12-18/12-22/12-26	433	198	22*22/28.4	1-8	125	102	4-12	45	434
300	178	395/400/410	440/445/460	12-22/12-22/12-26	503	223	22*22/31.6	1-8	150	102/125	4-12/14	50	670
350	190	445/460/470	490/505/520	12-22/16-22/16-26	590	260	22*22/31.6	1-8	150	102/125	4-12/14	50	1000
400	216	495/515/525	540/565/580	16-22/16-26/16-30	660	290	27*27/33.2	1-10	197	125/140	4-14/18	64	1664
450	222	550/565/585	595/615/640	16-22/20-26/20-30	722	320	27*27/38	1-12	197	140/165	4-18/22	64	1890
500	229	600/620/650	645/670/715	20-22/20-26/20-33	900	400	41/36	1-12	197	165	4-22	64	2440
600	267	705/725/770	755/780/840	20-26/20-30/20-36	1027	457	36*36/41.1	2-16	210/276	165	4-22	70	3350
700	292	810/840/840	860/895/910	24-26/24-30/24-36	1072	490	36*36/50.6	2-18	300	254	8-18	82	5600
800	318	920/950/950	975/1015/1025	24-30/24-33/24-39	1155	525	46*46/62	2-20	300	254	8-18	82	7300
900	330	1020/1050/1050	1075/1115/1125	24-30/28-33/28-39	1260	570	55*55/75	2-22	300	254	8-18	118	10000
1000	410	1120/1160/1170	1175/1230/1255	28-30/28-36/28-42	1390	645	55*55/86	2-25	300	254	8-18	148	13000

EPDM®

法兰式U型蝶阀-BUMS系列

Flange Type U Butterfly Valve-BUMS Series

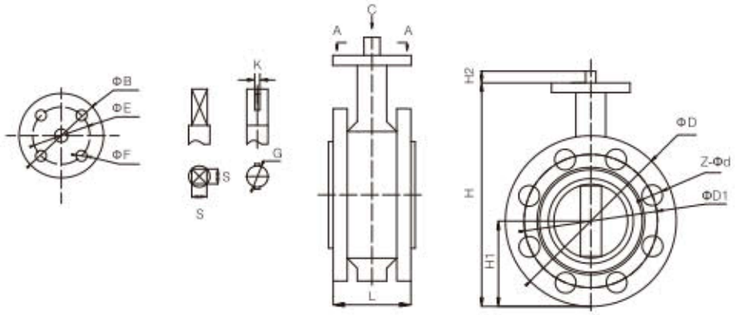

外形及连接尺寸 Shape and Connection Size

单位Unit：mm

公称通径 DN	L	D1	D	Z-Φd	H	H1	S*S/G	K	B	E	4-ΦF	H2	扭矩 N.m
		0.6/1.0/1.6	0.6/1.0/1.6	0.6/1.0/1.6						#			
50	42	110/125/125	140/165/165	4-14/4-18/4-18	205	82	9*9/12.6	1-3	75	50	4-7.5	27	22
65	45	130/145/145	160/185/185	4-14/4-18/4-18	230	92	9*9/12.6	1-3	75	50	4-7.5	27	28
80	45	150/160/160	190/200/200	4-18/8-18/8-18	245	100	9*9/12.6	1-3	75	50	4-7.5	27	44
100	52	170/180/180	210/220/220	4-18/8-18/8-18	270	107	11*11/15.7	1-5	90	70	4-10	27	69
125	55	200/210/210	240/250/250	8-18/8-18/8-18	305	123	14*14/18.9	1-5	90	70	4-10	27	114
150	55	225/240/240	265/285/285	8-18/8-22/8-22	374	144	14*14/18.9	1-5	90	70	4-10	27	155
200	60	280/295/295	320/340/340	8-18/8-22/12-22	436	176	17*17/22	1-5	120	102	4-12	45	282
250	66	335/350/355	375/395/405	12-18/12-22/12-26	500	200	22*22/28.4	1-8	120	102	4-12	45	434
300	76	395/400/410	440/445/460	12-22/12-22/12-26	583	233	22*22/31.6	1-8	150	102/125	4-12/14	50	670
350	76	445/460/470	490/505/520	12-22/16-22/16-26	640	270	22*22/31.6	1-8	150	102/125	4-12/14	50	1000
400	86/102	495/515/525	540/565/580	16-22/16-26/16-30	700	290	27*27/33.2	1-10	197	125/140	4-14/18	64	1664
450	105/114	550/565/585	595/615/640	16-22/20-26/20-30	750	320	27*27/38	1-12	197	140/165	4-18/22	64	1890
500	130	600/620/650	645/670/715	20-22/20-26/20-33	854	364	41/36	1-12	197	165	4-22	64	2440
600	151	705/725/770	755/780/840	20-26/20-30/20-36	1030	450	36*36/41.1	2-16	210/276	165	4-22	70	3350
700	163	810/840/840	860/895/910	24-26/24-30/24-36	1160	520	36*36/50.6	2-18	300	254	8-18	82	5600
800	188	920/950/950	975/1015/1025	24-30/24-33/24-39	1265	565	46*46/62	2-20	300	254	8-18	82	7300
900	203	1020/1050/1050	1075/1115/1125	24-30/28-33/28-39	1380	620	55*55/75	2-22	300	254	8-18	118	10000
1000	218	1120/1160/1170	1175/1230/1255	28-30/28-36/28-42	1525	705	55*55/86	2-25	300	254	8-18	148	13000

硬密封蝶阀-BFHS系列

Hard Sealed Butterfly Valve-BFHS Series

BFH16100PP2

BFW16300CC2

BFP1011K2PPP

BFE10150PPP

EPDM®

通风蝶阀-BFHV系列

Ventilation butterfly valve-BFHV series

BFH61K2CC2

BFW6800CC2

BFP61K0CC2

BFE62K0CC2

法兰式硬密封蝶阀结构及连接尺寸

Structure and Connection Dimensions of Flanged Hard Sealed Butterfly Valve

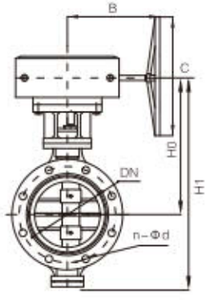

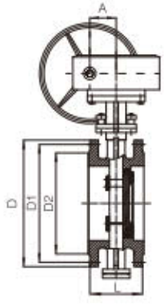

公称通径 Nominal Diameter DN:(mm)	主要尺寸 Main dimensions			法兰尺寸和螺栓规格 Flange dimensions and bolt specifications												蜗轮蜗杆传动 worm drive		
				1.0Mpa				1.6Mpa				2.5Mpa						
	L	H	H1	D	D1	D2	Z-Φd	D	D1	D2	Z-Φd	D	D1	D2	Z-Φd	A	B	C
50	108	293	218	165	125	99	4-18	165	125	99	4-18	165	125	99	4-18	32	130	160
65	112	313	228	185	145	118	4-18	185	145	118	4-18	185	145	118	8-18	32	130	160
80	114	333	238	200	160	132	4-18	200	160	132	8-18	200	160	132	8-18	32	130	180
100	127	345	255	220	180	156	8-18	220	180	156	8-18	235	190	156	8-22	50	150	180
125	140	370	270	250	210	184	8-18	250	210	184	8-18	270	220	184	8-26	50	150	200
150	140	425	305	285	240	211	8-22	285	240	211	8-22	300	250	211	8-26	62	150	200
200	152	488	362	340	295	266	8-22	340	295	266	12-22	360	310	274	12-26	62	150	350
250	165	575	410	395	350	319	12-22	405	355	319	12-26	425	370	330	12-30	80	160	350
300	178	642	444	445	400	370	12-22	460	410	370	12-26	485	430	389	16-30	80	160	400
350	190	731	492	505	460	429	16-22	520	470	429	16-26	555	490	448	16-33	94	185	400
400	216	786	522	565	515	480	16-26	580	525	480	16-30	620	550	503	16-36	94	185	600
450	222	844	552	615	565	530	20-26	640	585	548	20-30	670	600	548	20-36	94	185	600
500	229	945	606	670	620	582	20-26	715	650	609	20-33	730	660	609	20-36	132	232	600
600	267	1060	666	780	725	682	20-30	840	770	720	20-36	845	770	720	20-36	132	232	800
700	292	1222	726	895	840	794	24-30	910	840	794	24-36	960	875	820	24-42	185	295	800
800	318	1340	862	1015	950	901	24-33	1025	950	901	24-39	1085	990	928	24-48	185	295	400
900	330	1391	915	1115	1050	1001	28-33	1125	1050	1001	28-39	1185	1090	1028	28-48	234	354	400
1000	410	1596	1020	1230	1160	1112	28-36	1255	1170	1112	28-42	1320	1210	1140	28-55	234	354	400
1200	470	1861	1075	1445	1380	1328	32-39	1485	1390	1328	32-38	1530	1420	1350	32-55	296	354	400
1400	530	2066	1235	1675	1590	1530	36-42	1685	1590	1530	36-48	1755	1640	1560	36-60	296	426	600
1600	600	2397	1355	1915	1820	1750	40-48	1930	1820	1750	40-55	1975	1860	1780	40-60	410	426	600
1800	670	2674	1600	2115	2020	1950	44-48	2130	2020	1950	44-55	2195	2070	1985	44-68	410	550	600
2000	760	2901	1725	2325	2230	2150	48-48	2345	2230	2150	48-60	2425	2300	2210	48-68	506	550	600

通风蝶阀结构及连接尺寸

Structure and Connection Dimension of Ventilation Butterfly Valve

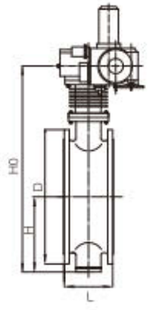

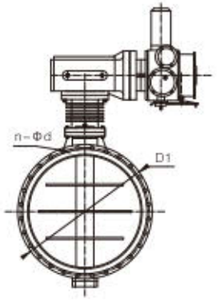

公称通径 Nominal Diameter DN:(mm)	法兰连接尺寸 Flange connection dimensions											
				0.5Mpa			0.25Mpa			0.6Mpa		
	L	H	H0	D	D1	Z-Φd	D	D1	Z-Φd	D	D1	Z-Φd
65	112	80	362	160	130	4-14	160	130	4-14	160	130	4-14
80	114	95	408	190	150	4-18	190	150	4-18	190	150	4-18
100	127	105	486	210	170	4-18	210	170	4-18	210	170	4-18
125	140	120	516	240	200	8-18	240	200	8-18	240	200	8-18
150	140	132	541	265	225	8-18	265	225	8-18	265	225	8-18
200	152	160	779	320	280	8-18	320	280	8-18	320	280	8-18
250	165	187	836	375	335	12-18	375	335	12-18	375	335	12-22
300	180	220	901	440	395	12-22	440	395	12-22	440	395	12-22
350	180	245	954	490	445	12-22	490	445	12-22	490	445	12-22
400	200	270	1003	540	495	16-22	540	495	16-22	540	495	16-22
450	200	297	1058	595	550	16-22	595	550	16-22	595	550	16-22
500	220	322	1111	645	600	20-22	645	600	20-22	645	600	20-22
600	220	377	1233	755	705	20-26	755	705	20-26	755	705	20-26
700	240	430	1338	860	810	24-26	860	810	24-26	860	810	24-26
800	240	487	1452	975	920	24-30	975	920	24-30	975	920	24-30
900	260	537	1588	1075	1020	24-30	1075	1020	24-30	1075	1020	24-30
1000	260	587	1689	1175	1120	28-30	1175	1120	28-30	1175	1120	28-30
1200	280	702	1938	1375	1320	32-30	1375	1320	32-30	1405	1340	32-33
1400	300	782	2670	1575	1520	36-30	1575	1520	36-30	1630	1560	36-36
1600	320	895	2810	1790	1730	40-30	1790	1730	40-30	1830	1760	40-36
1800	340	995	3020	1990	1930	44-30	1990	1930	44-30	2045	1970	44-39
2000	360	1095	3220	2190	2130	48-30	2190	2130	48-30	2265	2180	48-42
2200	380	1200	3430	2405	2340	52-33	2405	2340	52-33	2475	2390	52-42
2400	400	1310	3650	2605	2540	56-33	2605	2540	56-33	2685	2600	56-42
2600	420	1420	3920	2805	2740	60-33	2805	2740	60-33	2905	2810	60-48
2800	440	1530	4140	3030	2960	64-36	3030	2960	64-36	3115	3020	60-48
3000	460	1640	4360	3230	3160	68-36	3230	3160	68-36	3315	3220	68-48